CTB TECHNOLOGY

D18 DRIVER

Instruction Manual

AC SERVO DRIVER

MODEL:D18-□□□□□□

400V 4~320A

PLEASE GIVE THIS INSTRUCTION MANUAL TO THE END USER AND KEEP IT PROPERLY.

CTB超同步

CTB-PI-I-2609-06-01

Foreword

Thank you for your purchase of D18 series AC servo driver from CTB Co., Ltd. D18 series AC servo driver is an AC servo driver with high quality, multi-function and low noise, developed and produced by CTB Co., Ltd. The D18 series AC servo driver is an AC servo driver for AC Induction Motors (IM) and AC Permanent Magnet Synchronous Motors (PM), which can conveniently control position, speed, acceleration, and output torque of various kinds of AC servo motors.

Adopting dual 32-bit CPUs, D18 series AC servo drivers are configured with rich control function modules, which can realize the control functions of various machine tools. The standard control interface can be conveniently connected with various domestic and foreign CNC systems, so that the functions of the CNC system can be fully utilized. The machine tool equipped with D18 series AC servo drive will have extraordinary performance in torque characteristics, acceleration and deceleration characteristics, precision characteristics and efficiency characteristics, and can easily realize the functions of Directed stop, C-axis, rigid tapping, electronic shifting and multi-axis synchronization.

D18 series AC servo drivers can be widely used in the drivers of various CNC milling machines, vertical machining centers, horizontal machining centers, CNC boring machines, CNC lathes, vertical lathes, heavy-duty horizontal lathes, gantry machine tools, etc. which are the first choice of drivers for power axes of all kinds of machine tools.

Prior to the use of the D18 AC servo drivers, please read this manual carefully to ensure proper use. Incorrect use may cause the driver to operate abnormally, breakdown or reduce its service life, or even cause personal injury. Therefore, please read this manual repeatedly before use and use it strictly according to the instructions. This manual is enclosed as an accessory, so please keep it properly after use for future overhaul and maintenance of the driver.

Description of Safety-Related Symbols

The contents related to safety in this manual use the following symbols, and labels the statements with the safety symbols. The descriptions are all significant contents, so please be sure to observe the same. Failure to comply with the safety contents and use of the products may result in improper use of the product or even damage to the product, and in serious cases, may cause danger, personal injury or death.

Danger	This label is used when an error in the use of the content described could cause a hazard that may result in personal injury or death.
Caution	This label is used when an error in the use of the content described could cause a hazard that may result in minor or moderate injury to persons and damage to equipment.
Prohibition	This indicates a prohibition (a matter that cannot be done).
Important	Certain matters are not covered by the “Danger” and “Caution” sections, but are required to be observed by the user and are also labeled in the relevant sections.

Safety Precautions

◆ Unpacking

⚠ Caution

● Damaged drivers and drivers with missing parts should never be installed.
There is a risk of injury.

◆ Installation

⚠ Caution

● Please install it on a metal plate that is not easily combustible and do not install it near combustibles.
There is a risk of fire.
● Be sure to tighten the mounting screws of the driver.
Loose mounting screws may cause damage to the driver by falling or injury to personnel.
● Do not install in an environment with flammable gases.
It can easily cause an explosion.

◆ Wiring

⚠ Danger

● Make sure that the input power is off before wiring.
● There is a risk of electric shock and fire.
● When working on the main circuit terminals of the controller, wait 5 minutes after disconnecting the power supply and after the power charging indicator CHARGE in the controller is completely turned off.
There is a risk of electric shock.
● Please have the wiring done by a professional electrical engineer.
There is a risk of electric shock and fire.
● Please be sure to ground reliably at the grounding terminal. (Grounding resistance of 4Ω or less)
There is a risk of electric shock and fire.
● It is prohibited to connect P/PB directly to the N terminal.
This can cause a short circuit in the rectifier bridge and burn out the main circuit.
● It is prohibited to connect high-voltage lines to the driver's control terminals.
This may cause the control board to burn out.
● Please set the emergency stop and locking circuit outside the controller.
There is a risk of injury (responsibility for wiring belongs to the user).
● There is a risk of electric shock and short circuit.

◆ Wiring

⚠ Caution

● Make sure that the AC input power to the main circuit matches the rated voltage of the driver.
There is a risk of injury and fire.
● Do not perform voltage withstand and insulation tests on the controller.
This may cause damage to semiconductors and other devices inside the controller.
● Please connect the brake resistor and brake unit according to the wiring diagram.
There is a risk of fire.

● Do not connect the AC input power cord to the output U, V, and W terminals.
It can cause internal damage to the controller.
● The grounding terminals must be well grounded.
There is a risk of injury.
● Tighten the main and control circuit terminals of the driver with the appropriate torque.
There is a risk of fire, and of the driver malfunctioning.
● Do not connect phase-shifting electrolytic capacitors and LC/RC noise filters to the output circuit.
It can cause internal damage to the controller.
● Do not connect a solenoid switch or solenoid contactor to the output circuit for switching on or off the load.
When the controller is operating with a load, the surge current can cause the controller's protection circuit to operate.

◆ Trial operation

Danger

● Do not touch the main circuit terminals directly after turning on the power.
There is a risk of electric shock and short circuit.
● Check the input and output signals to ensure safe operation.
Malfunctioning of the system can cause injury or death and damage to the workpiece and peripheral equipment.
● Alarm reset is possible only after confirming that the operation signal has been cut off; alarm reset in a state with an operation signal will suddenly restart.
There is a risk of injury.
● For drivers that have been stored for a longer period of time, first make sure there is no water or condensation inside.
There is a risk of burning out the driver.
● Do not touch the terminals on the driver with your hands during operation.
There is a risk of electric shock or burning out the driver.

Caution

● The AC servo driver and motor may have a high temperature rise after starting operation. Do not touch them freely.
There is a risk of burns.
● The brake resistor has a high temperature rise due to discharge. Please do not touch it.
There is a risk of burns and electric shock.
● Do not change the driver settings arbitrarily.
There is a risk of damage to the equipment and of accidents.

◆ Maintenance & Inspection

Danger

● Do not touch the controller terminals directly, as some of the terminals have high voltage on them, which is very dangerous.
There is a risk of electric shock.
● Be sure to install the outer cover before energizing; please be sure to disconnect the power supply first when removing the outer cover.
There is a risk of electric shock.
● Please make sure that the input power is off before wiring.
There is a risk of electric shock and fire.
● Disconnect the main circuit input power and make sure that the power charging indicator CHARGE is completely off before inspection and maintenance.
There is a risk of electric shock due to residual charge on the electrolytic capacitor.
● Please have the inspection and maintenance work performed by designated professional electrical engineers.
Please remove metal objects (watches, rings, etc.) from your body before work; use insulated and protected tools during work. Otherwise, there is a risk of electric shock.
● Used batteries and printed circuit boards should never be thrown into a fire, as this may cause an explosion.
There is a risk of explosion and fire.

Caution

● Please pay full attention to the use of the CMOS IC integrated circuits installed on the main control board.
Static induction can cause damage to the main control board if it is touched directly with a finger.
● Do not perform work such as wiring or removing terminals while energized.
There is a risk of electric shock.
● The appropriate parameters must be set before operation after replacing the control board.
There is a risk of damage to the equipment.

Contents

Foreword.....1
Description of Safety-Related Symbols.....2
Safety Precautions.....3

1. Installation 1-1
About D18 DRIVER.....1-2
Unpacking.....1-3
Technical Specifications.....1-4
Nameplate Description.....1-5
Overall Dimensions and Mounting Size.....1-5
Identification and Requirements for Mounting Space.....1-7
Precautions on Motors and Loads.....1-8
Precautions on the Driver.....1-9
Precautions on Disposal.....1-9

2. Wiring 2-1
Selection and Connection of Peripheral Devices.....2-2
Wiring of Main Circuit Terminals.....2-3
Wiring of Control Circuits.....2-12
Connection of Encoder Interfaces.....2-23

3. Use of Controllers 3-1
Profile and Key Functions of the Controller.....3-2
Driver’s Runing state.....3-3
Controller’s Runing state.....3-3
How to Use the Controller.....3-4
Parameter Modification With the Controller.....3-4
Monitoring the Runing state with the Controller.....3-5

4. Trial Operation 4-1
Basic Process for Trial Operation.....4-2
Wiring Verification of Main Circuit.....4-2
Parameter Verification of Motor and Driver.....4-3
Trial Operation with Loads.....4-3

5. Parameters List 5-1
U1 State Monitoring Parameter Set.....5-2
U2 State Monitoring Parameter Set.....5-3
U3 Fault Message Parameter Set.....5-6
A1 Basic Parameter Set.....5-7
A2 User Parameter Set.....5-11
A3 User Parameter Set.....5-15
Bn Bus Parameter Set.....5-21
Cn Control Parameter Set.....5-27

Dn Motor Parameter Set....5-33
En Encoder Parameter Set....5-38
Fn Function parameter Set....5-45
Hn Interface Parameter Set....5-52
Pn Protection Parameters....5-60
Sn System Parameter Set....5-66

6. Parameter Settings by Functions 6-1
Analog Speed Control....6-2
Pulse Velocity Control....6-4
Analog Rigid Tapping....6-6
Pulse Rigid Tapping / Pulse Position....6-7
Directed Stop....6-7
Swing....6-9
Operator Panel Operation....6-12
modbus Communication Settings....6-13
Star/delta conversion....6-14
S-curve....6-16
Fieldbus Applications....6-17

7. Troubleshooting....7-1
List of Fault Alarms and Solutions....7-2
Analysis of Common Faults....7-7
Reset Methods for Alarms....7-11

8. Maintenance and Care....8-1
Tips....8-2
Routine Care and Maintenance....8-2
Regular Maintenance....8-3
Consumables....8-4
Driver Storage....8-4
Driver Warranty....8-5

D18 DRIVER

1 Installation

This section describes the matters to be confirmed and the installation requirements once the user gets the D18 driver.

About D18 DRIVER.....1-2
Unpacking.....1-3
Technical Specifications.....1-4
Overall Dimensions and Mounting Size.....1-5
Identification and Requirements for Mounting Space.....1-7
Precautions on Motors and Loads.....1-8
Precautions on the Driver.....1-9
Precautions on Disposal.....1-9

About D18 DRIVER

D18 DRIVER is a driver designed for machine tools, which can precisely control the position, speed, acceleration and output torque of AC induction servo motors and permanent magnet synchronous motors. D18 DRIVER can be used for the control of machine tool motors such as machining centers, CNC milling, CNC drilling, CNC lathes, grinding machines, as well as for the control of feed motors of large-scale gantry equipment and vertical lathes, etc. To realize the best operation, please refer to the CTB Servo Application Manual to complete the wiring with the CNC system, and refer to this manual for installation and commissioning.

Model Description

D18 - A 4 16A0 H - B R

1 2 3 4 5 6

Code	Name	Description	Model Meaning
1	Product Series	D18: 18 series driver	D18: 18 series driver
2	Product Type	A: I/O motherboard B: Bus motherboard	I/O主板
3	Voltage Rating	2: 200V 4: 400V 6: 600V	400V
4	Rated Current	See ‘Specifications’	16A
5	Motherboard Type	B: I/O terminal type (CP18-B motherboard) S: High-density plug (CP18-S motherboard) E: EtherCAT (CP18-E motherboard) M: MechatrolinkIII(CP18-M motherboard) P: Profinet(CP18-P motherboard)	I/O interface with terminals
6	Built-in Braking Resistor	R: equipped with built-in braking resistor	Equipped with built-in braking resistor

- THE D18 DRIVER SERIES IS AVAILABLE IN 16 MODELS FOR MOTOR CURRENTS FROM 4 TO 320A, AS SHOWN IN THE TABLE BELOW.

Driver Model	Rated Output Current (A)	Applicable Motor Power (KW)	Built-in Braking Unit	Built-in Braking Resistor
D18-X203A3	3.3	0.4	Yes	No
D18-X209A5	9.5	1.1	Yes	Yes
D18-X216A0	16	2	Yes	Yes
D18-X404A0	4	1.5	Yes	Optional
D18-X406A0	6	2.2	Yes	Optional
D18-X409A0	9	3.7	Yes	Optional
D18-X412A0	12	5.5	Yes	Optional
D18-X416A0	16	7.5	Yes	Optional
D18-X422A0	22	11	Yes	Optional
D18-X432A0	32	15	Yes	No
D18-X438A0	38	18	Yes	No
D18-X445A0	45	22	Yes	No
D18-X460A0	60	30	Yes	No
D18-X475A0	75	37	Yes	No
D18-X490A0	90	45	Yes	No
D18-X40110	110	55	Yes	No
D18-X40150	150	75	Yes	No
D18-X40180	180	90	Yes	No
D18-X40220	220	110	Yes	No
D18-X40280	280	132	Yes	No
D18-X40320	320	160	Yes	No

Unpacking

Please check the following items when you get the product, and contact the purchasing agent or manufacturer directly if there is any defect.

Identified Items	Methods
Identify whether the items listed in the packing list are complete?	The packing list is affixed to the outer packaging and is checked to be consistent with the contents of the box.
Identify if it's the same as the items ordered?	Identify the label on the side of the driver.
Identify if anything is broken?	Look at the overall appearance and check for damages during transportation.

Technical Specifications

Items		Specification
Output	Max. output voltage (V)	Three-phase 200/220/240/260 V input voltage Three-phase 380/400/415/440 V input voltage
	Max. output speed (rpm)	4-pole motor 15000 rpm, 500 Hz
Power supply	Rated voltage, frequency	Three-phase 200/220/240/260 V; 50/60 Hz Three-phase 380/400/415/440 V; 50/60 Hz
	Voltage fluctuation	+10%, -15%
	Frequency fluctuation	±5%
Control features	Mode of control	Sinusoidal wave PWM, closed loop vector control
	Max. speed range	1:15,000
	Speed control accuracy	±0.1%
	Frequency setting resolution	Digital: 0.01 Hz; analog: double-polarity max. output frequency/2046
	Position control accuracy	±1 PULSE
	Acceleration/ deceleration	0～3000s
	Brake	Dynamic braking, 125% rated current; built-in braking unit
	Overload capacity	30 s at 200% rated current
I/O interfaces	Digital input	14 optical coupled isolation inputs; mode of input: PNP, NPN (optional)
	Digital output	6 optical coupled isolation outputs; 24 V, 10 mA
	Analog input	1 x: -10 to 10V 1 x: 0 to 10V 1 x: 0 to 10V or 4 to 20mA
	Relay output	1×: one set of NO/NC contacts ; AC125V/DC30V, 1A
	Fault output relay	1×: one set of NO/NC contacts ; AC125V/DC30V, 1A
	Encoder input interface	2 x: incremental encoder, intelligent encoder
	Pulse input	1×: directed pulse, orthogonal pulse (optional)
	Encoder output interface	1×: 300 KHz max. output frequency, linear driver output mode, RS422 standard
	Bus interface	ETHERCAT, PROFINET, MACHATROLINK-III
Controls	Speed control	Range: 0-30000 rpm; direction: CW, CCW; speed commands: analog, pulse frequency, multi-stage speed control, communication
	Position control	Auto zero return, reciprocating positioning, multi-point positioning
	Torque control	Reeling control, swing control, torque control
	Others	External encoder positioning, synchronous drive, hydraulic servo, PID control
Protection	Driver/motor over-current	Detection of driver and motor over-current
	Driver/motor overload	Detection of driver and motor overload
	Motor overheat	Built-in motor overheat interface
	Low voltage/over-voltage	400V drive Main circuit busbar voltage: over-voltage alarm output if higher than 800 V; under-voltage alarm output if lower than 400 V
Working environment	Working site	No dust, corrosive gases or combustible gases
	Temperature	-10 to 45 °C
	Humidity	<95%RH (non-condensing)
	Vibration	Vibration frequency ⩽ 20 Hz: 9.8 m/s2; 20 Hz ⩽ vibration frequency ⩽ 50 Hz: 2 m/s2

Nameplate Description

A nameplate identifying the driver model and rating is affixed to the lower right side of the driver housing as shown.

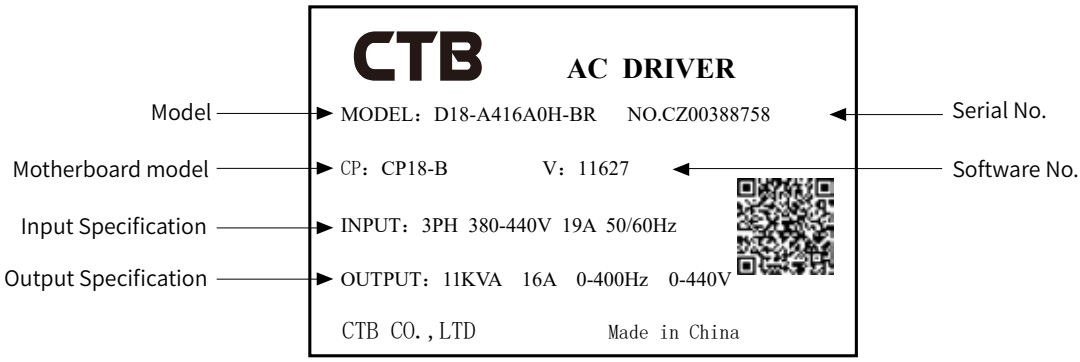

Note: The QR code contains: serial number of the driver; customer name (take CTB Co., Ltd. as an example); the contract number; the driver model; the motherboard model; the software number; the non-standard requirements (take the standard as an example) and other instructions.

Overall Dimensions and Mounting Size(Standard Installation)

1.Profile and Mounting Size of 1.5～3.3A Driver

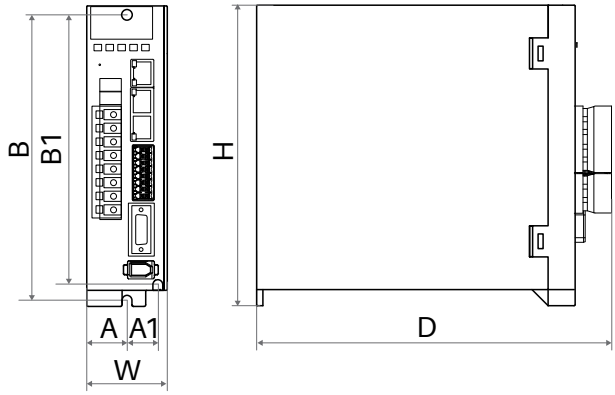

Size / Model	A	B	B1	W	H	H1	D	E	Terminal Screw	Mounting Screw	Weight (kg)
D18-X203A3	22.5	159.5	150.5	45	168	-	200	-	Clamp width 3mm	M5	1.5

2.Profile and Mounting Size of 5.5～16A Driver

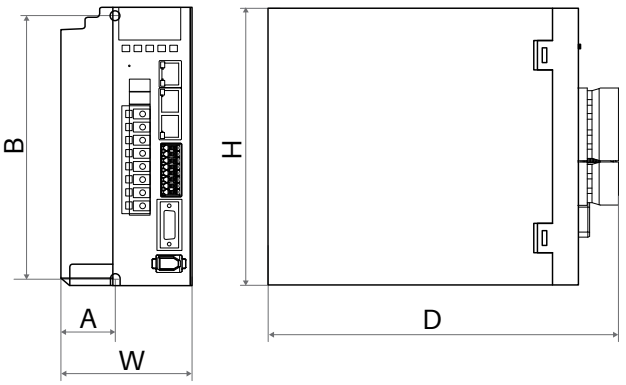

Size / Model	A	B	B1	W	H	H1	D	E	Terminal Screw	Mounting Screw	Weight (kg)
D18-X209A5	31	150	-	75	160	-	200	-	Clamp width 3mm	M5	1.5
D18-X216A0											

3.Profile and Mounting Size of 4～9A Driver

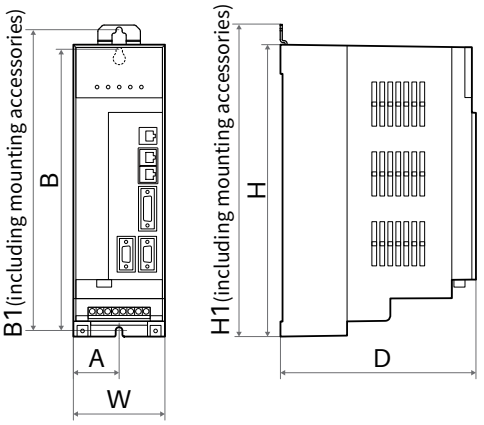

Size / Model	A	B	B1	W	H	H1	D	E	Terminal Screw	Mounting Screw	Weight (kg)
D18-X404A0	45.5	276	B+22	91	290	H+19	194	-	Clamp width 3mm	M6	3
D18-X406A0											
D18-X409A0											

4.Profile and Mounting Size of 12～22A Driver

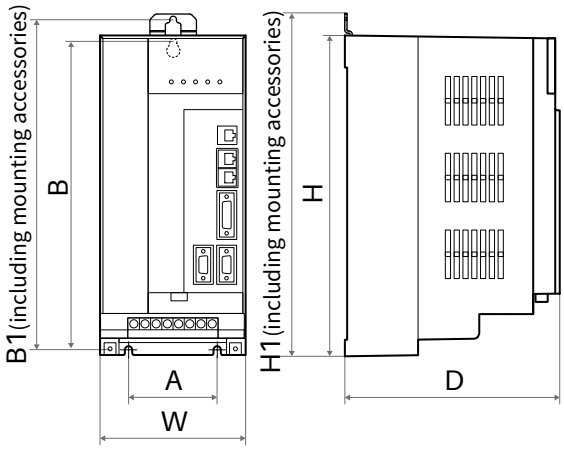

Size / Model	A	B	B1	W	H	H1	D	E	Terminal Screw	Mounting Screw	Weight (kg)
D18-X412A0	80	276	B+22	132	290	H+19	194	-	Clamp width 3mm	M6	5
D18-X416A0											
D18-X422A0											

5.Profile and Mounting Size of 32～110A Driver

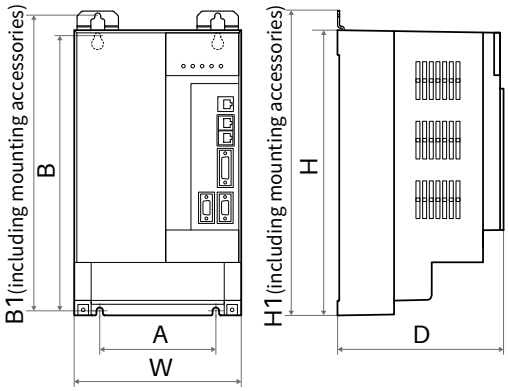

Size / Model	A	B	B1	W	H	H1	D	E	Terminal Screw	Mounting Screw	Weight (kg)
D18-X432A0	140	319	B+22	195	333	H+19	194	-	M6	M6	12
D18-X438A0	140	330	-	195	345	-	236	-	M6	M6	12
D18-X445A0											
D18-X460A0	236	376	-	282	390	-	260	-	M8	M8	20
D18-X475A0											
D18-X490A0	300	376	-	380	390	-	260	-	M8	M8	26
D18-X40110											

6.Profile and Mounting Size of 150～320A Driver

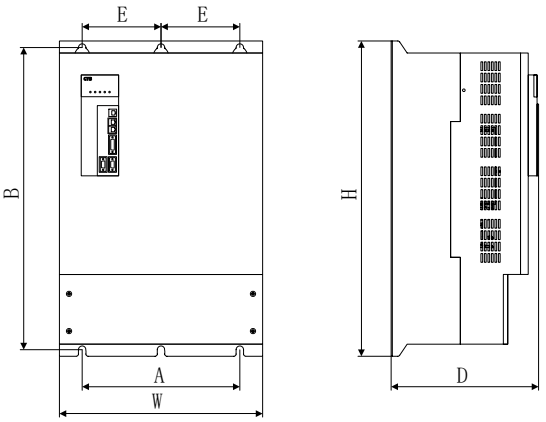

Size / Model	A	B	B1	W	H	H1	D	E	Terminal Screw	Mounting Screw	Weight (kg)
D18-X40150	392	376	472	390	260	-	-	196	M10	M8	33
D18-X40180											
D18-X40220	360	690	464	720	335	-	-	180	M10	M10	90
D18-X40280											
D18-X40320											

Overall Dimensions and Mounting Size(Flush Mounting)

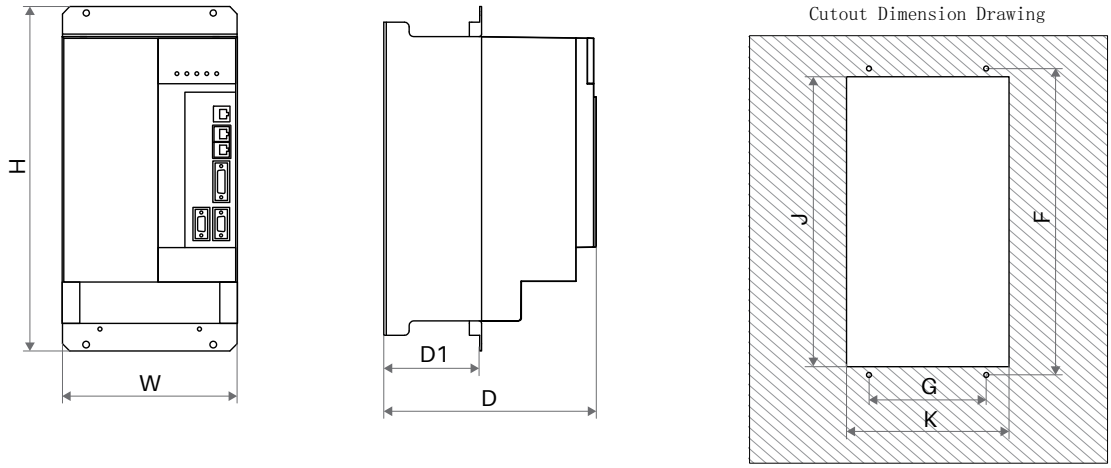

Figure 1-1 38~45A

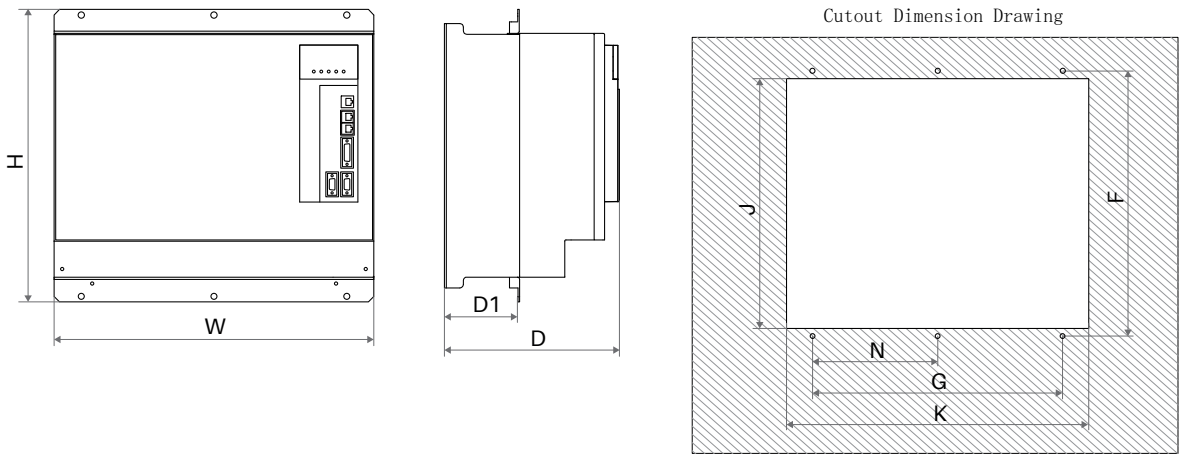

Figure 1-2 60~180A

Size / Model	D	D1	W	H	F	G	J	K	Mounting Screw	Notes
D18-X438A0	236	106	193	380	366	140	346.5	194	M6	Figure 1-1
D18-X445A0										
D18-X460A0	260	112	283	431.6	415.6	236	391	284	M8	Figure 1-2
D18-X475A0										
D18-X490A0	260	108.5	380	431.6	415.6	300	391	381	M8	
D18-X40110										
D18-X40150	260	108.5	472	431.6	415.6	392	391	473	M8	
D18-X40180										

Identification and Requirements for Mounting Space

Mounting Environment

When selecting the mounting environment, the following should be noted:

1.Ambient temperature: -10°C～45°C; if the ambient temperature is higher than 45°C, it should be used at a 30% derating for each increase of 5°C.

★Note: If the ambient temperature exceeds 45 °C, ventilation should be strengthened to dissipate the heat and derated as specified.

2.The humidity of the mounting site is less than 95% with no water condensation;

3.Do not install in a place with a lot of dust and metal powder;

4.To install in a place without corrosive and explosive gases;

5.To install in a place that meets the vibration requirements with a vibration frequency ⩽ 20Hz: 9.8m/s2; 20Hz ⩽ vibration frequency ⩽ 50Hz: 2m/s2;

6.To install in a location free from direct sunlight.

Mounting Directed stop and Space

- The mounting spacing and distance requirements for each driver are shown in Figure 1-3.
- When installing multiple drivers in the control cabinet, it should be installed side-by-side, with air inlet, outlet and dedicated cooling fan; if installed up and down, baffle plates should be installed between the drivers to ensure good heat dissipation; as shown in Figure 1-4.

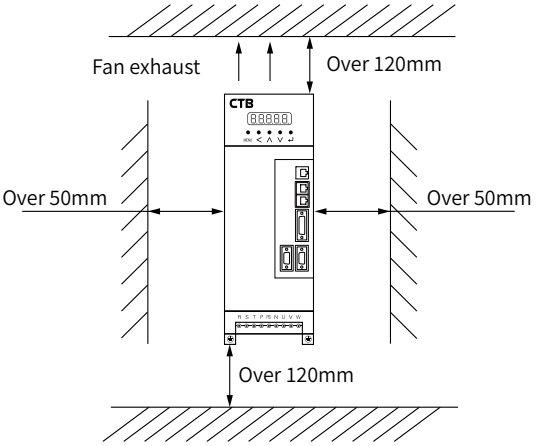

Figure 1-3 Installation of a Single Controller

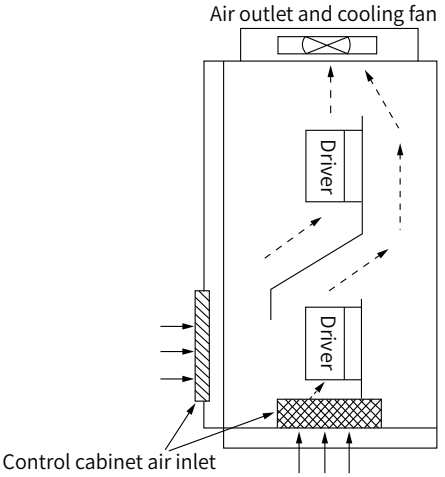

Figure 1-4 Installation of Multiple Controllers

Precautions on Motors and Loads

Comparison with inverter operation

D18 DRIVER is a full closed-loop vector AC servo driver, which can automatically adjust the output voltage and current according to the load change, featuring more energy-saving, higher speed control accuracy and wider speed regulation range than inverter. Since the motor and driver being controlled are closed-loop, it can easily realize position control and speed control as well as torque control.

Constant-torque Operation

Control the motor operates in a constant torques, where the output torque of the motor is the torque required for the operation of the machine, rather than the rated torque of the motor, but the max. continuous output torque of the motor cannot exceed the rated torque.

High-speed Operation at Constant Powers

Control the motor When operating at a high speed at constant powers, in addition to considering vibration and noise increase, it is also necessary to ensure and check beforehand that the range of speeds for the use of motor bearings and mechanical devices. It is strictly prohibited to operate the machine over the rated speed.

Lubrication of Mechanical Devices

The power output end of the driving motor has a mechanical device that requires lubrication. During long-term operation, damage may occur due to deterioration in lubrication; be sure to check beforehand.

Negative Torque Loads

Negative torque often occurs with lifting loads, and the driver will trip due to the generation of overcurrent and overvoltage alarms, which should be considered as optional braking components or mechanical safety devices.

Reciprocating Loads

When the driver is driving a piston reciprocating load, please note that the output current will be unstable; if the situation of long-term low-frequency operation is more prominent, the capacity of the driver should be increased.

Mechanical Resonance Points of Load Devices

The driver may encounter mechanical resonance points of load devices within a certain range of output frequencies, which can be avoided by setting a hopping frequency.

Precautions on Drivers

Use Beyond Rated Voltage Values

It is not applicable to use the AC servo drivers with voltages outside the permissible operating voltages. Please use the appropriate step-up or step-down device for voltage transformation, if required.

Three-phase Input to Single-phase Input

If it is not suitable to change to single-phase input, phase loss protection will occur at heavy loads.

Capacitors or Pressure Sensitive Devices to Improve Power Factor

As the driver output is a pulse wave, when the output side is installed with a capacitor to improve power factor or a pressure sensitive resistor for lightning protection, etc., it will cause the driver to malfunction and trip or damage the device, please be sure to remove it as shown in the figure below.

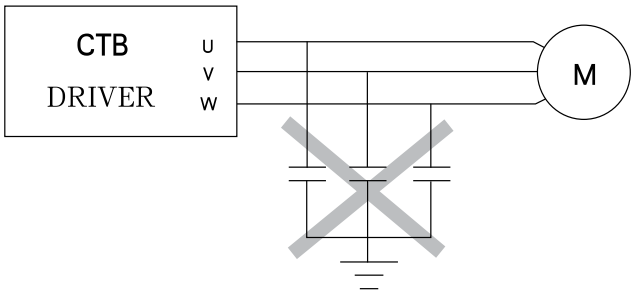

Lightning Impact Protection

The driver is equipped with a lightning overcurrent device, which is self-protective against induced lightning.

Altitude and Derating Use

In areas where the altitude exceeds 1,000 meters, it is necessary to derate the driver due to poor heat dissipation caused by thin air. The figure below shows the relationship between the rated current of the driver and the altitude.

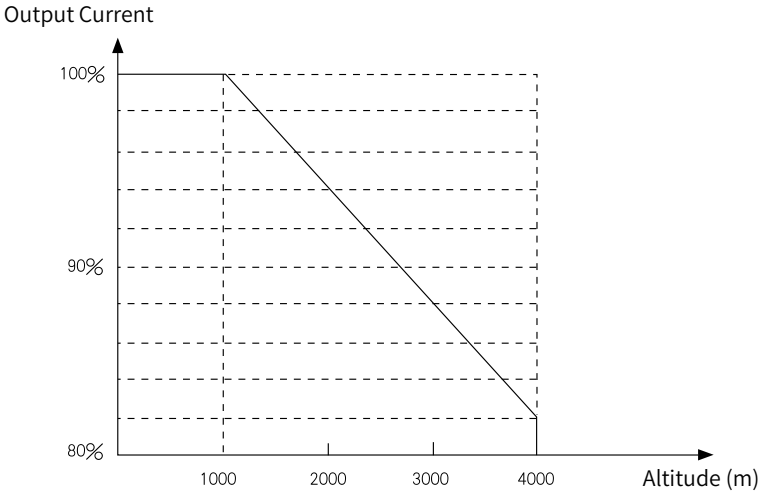

Precautions on Disposal

Explosion of electrolytic capacitors: Explosion may occur when the electrolytic capacitors in the main circuit and the electrolytic capacitors on the printed board are incinerated.

Exhaust gases from burning plastics: Toxic gases will be generated when plastic parts such as front panels are burned.

Disposal: Please dispose of it as industrial waste.

★Note: If the contents of this manual is changed due to product upgrade or optimization, please refer to the new version.

D18 DRIVER

2 Wiring

This section describes the wiring specifications for power terminals and control loop terminals, as well as the mounting and wiring specifications for control board jumpers and extended interface boards.

Selection and Connection of Peripheral Devices.....2-2
Wiring of Main Circuit Terminals.....2-3
Wiring of Control Circuits.....2-12
Connection of Encoder Interfaces..... 2-23

Selection and Connection of Peripheral Devices

Schematic diagram of driver and peripheral device connection is shown with 9A driver as an example.

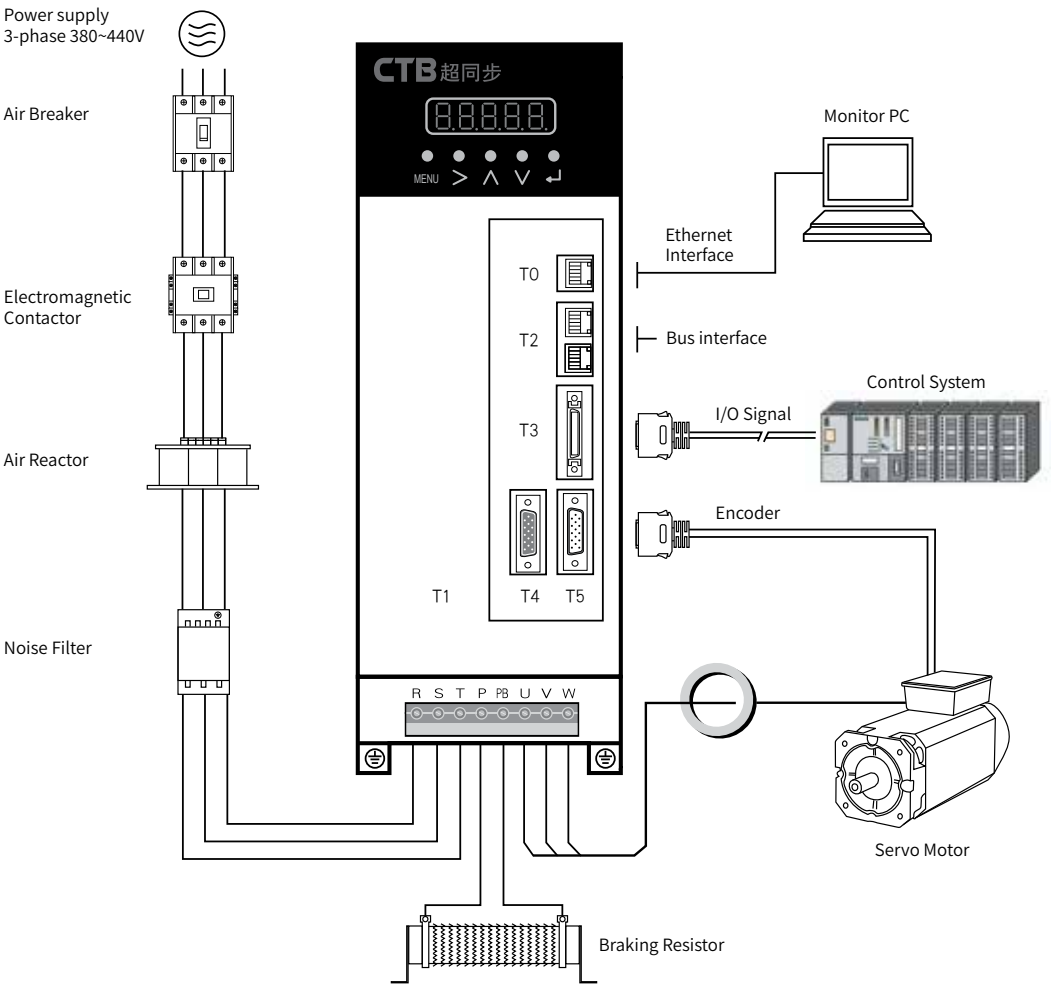

Instructions for Parts Selection

Name	Purpose	Precautions
Air Circuit Breaker	Turns power to the driver on or off	Select at 120%-150% of the rated current of the driver
Magnetic contactor	Cut off power automatically in the event of an automatic power-up or failure of the driver	Select at 100%-150% of the rated current of the driver
Input Reactor	Improve the power factor of the power grid and suppress the high harmonics of the power supply	Select at 100% of the rated current of the driver
Input Noise Filter	Suppress driver interference to power supply	Select at 100% of the rated current of the driver
Braking Resistor	Consume regenerative energy from the driver	Select at standards provided by the manufacturer
Filter Ring	Suppress wireless and common-mode interference from the driver	Select at standards provided by the manufacturer

Wiring of Main Circuit Terminals

Structure of Main Circuit

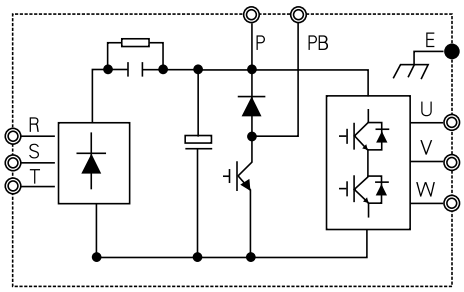

Composition of Main Circuit Terminals

1.5~75A、220~320A main circuit terminals composition

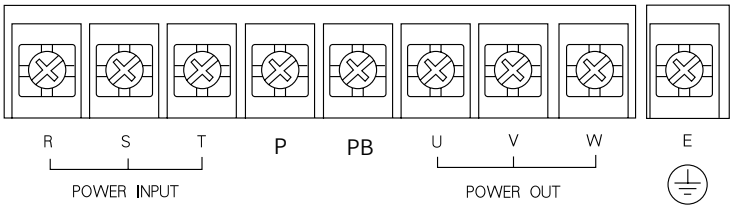

90~180A main circuit terminals composition

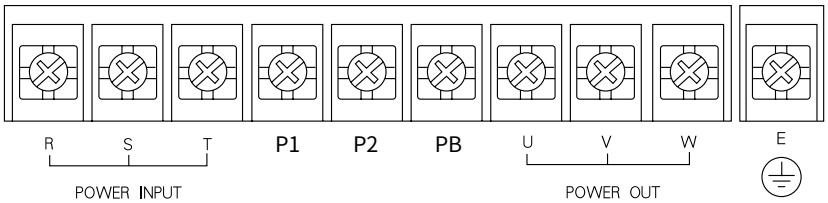

Main circuit terminals and functional description

Item	Function	Notes
R S T	3-phase AC supply input terminal. 380~440V, 50/60Hz	Need to install breaker for protection
P	DC bus positive pole	P and PB are for external braking resistor
P1 P2	DC reactor wiring terminal	P1 and P2 are for external DC reactor,If there is no reactor, please connect the short-circuit connector
PB	Braking resistor wiring terminal	P or P2 and PB are for external braking resistor
U V W	Driver output terminal	Consistent with the phase sequence of the motor during wiring
E	Earth terminal	C type grounding, the grounding resistance≤ 4Ω

Input Wiring for Main Circuit

For wiring on the input side of the main circuit, please note the following, and see the figure below for standard wiring.

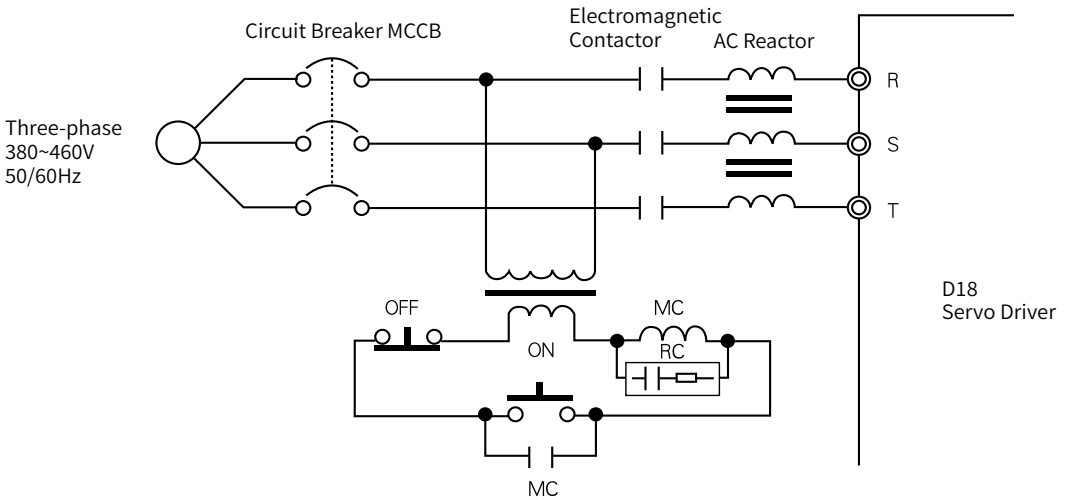

Selection of Devices at Input Side of the Main Circuit

Model	Circuit Breaker Current (A)	Contactor Current (A)	AC Reactor Input Filter Current (A)	Cable Specification at Main Circuit (mm2)
D18-X203A3	6	9	6	2
D18-X209A5	16	9	10	4
D18-X216A0	25	25	20	4
D18-X404A0	10	9	5	2.5
D18-X406A0	10	9	7	2.5
D18-X409A0	16	16	10	4
D18-X412A0	25	16	15	4
D18-X416A0	25	25	20	4
D18-X422A0	32	25	30	6
D18-X432A0	40	32	40	10
D18-X438A0	63	40	40	10
D18-X445A0	63	50	50	16
D18-X460A0	100	63	60	16
D18-X475A0	100	80	80	25
D18-X490A0	150	90	90	25
D18-X40110	150	150	120	50
D18-X40150	200	150	150	50
D18-X40180	200	200	180	50
D18-X40220	300	250	220	70
D18-X40280	400	300	320	70
D18-X40320	400	300	320	70

Inlet Circuit Breaker (MCCB)

The power input terminals (R, S, T) of the main circuit must be connected to a three-phase AC power source through a circuit breaker (MCCB) for line protection.

● The time features of the MCCB take full account of the overload features (200% of rated output current/1 minute) and time features of the AC servo driver.

● Each AC servo drive should be independently installed with a circuit breaker; when multiple drivers share a single circuit breaker, it is recommended to use the fault output relay of this driver to control the inlet magnetic contactor for safety in order to cut off the power supply when the driver fails and to prevent the fault from spreading.

⚠ Caution Installation of Earth Leakage Circuit Breakers

Since the output of the servo drive is a high-frequency pulse wave, please use a dedicated earth leakage circuit breaker for the servo (inverter) when wiring.

● When selecting a dedicated earth leakage circuit breaker, please select one that controls a driver with a sense current of 30mA or more.

● When selecting a general earth leakage circuit breaker, please select one that controls a driver with a sense current of 200mA or more with a time of 0.1 second or more.

Installing an isolation transformer between the general earth leakage circuit breaker and the AC servo driver can effectively prevent the circuit breaker from malfunctioning.

Inlet Magnetic contactor

The inlet magnetic contactor can be used to cut off power during sequence control. The inlet magnetic contactor cannot be used to start the AC servo driver. When an inlet magnetic contactor is used to forcibly de-energize an AC servo driver, the AC servo driver is in a power-failure alarm state, and the motor can only freely coast to a stop.

● Frequent turning on/off of the inlet magnetic contactor can cause the driver’ s charging resistor (inside the driver) to heat up or even burn out.

● Turn on/off the inlet magnetic contactor at intervals greater than 10 minutes.

AC Reactor (Optional)

Installing an AC reactor on the inlet side of an AC servo driver effectively suppresses power surges and avoids burning out the rectifier section of the driver, and at the same time improves the power factor on the power supply side.

Power-Side Noise Filter

o minimize high-frequency interference noise coupled to the driver from the power cord, and also to suppress noise fed from the driver to the power supply, a noise filter of appropriate type and specification can be installed on the power input side of the driver.

Correct setting and connection of the inlet filters:

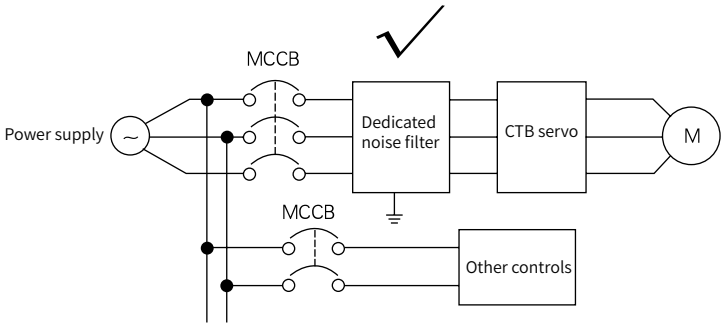

Please use a noise filter for AC servo or inverters; the noise filter should be well grounded.

Incorrect setting and connection of the inlet filters:

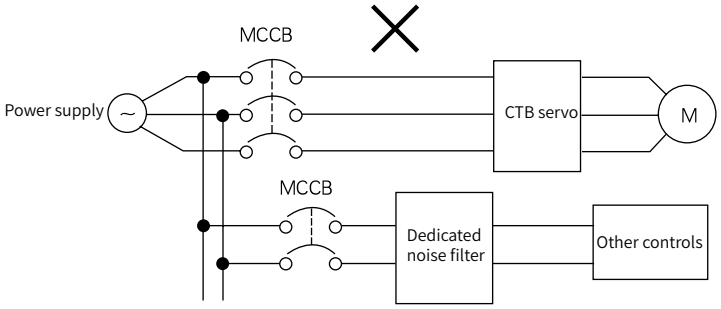

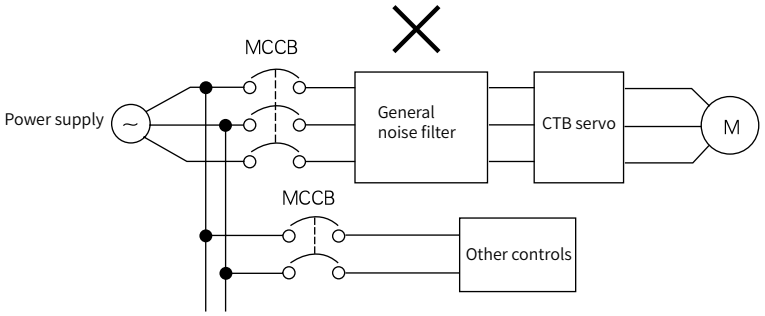

General noise filters have very little effect in suppressing noise from the driver and are therefore not recommended.

Wiring on Output Side of Main Circuit

The output terminals U, V, W of the driver should be connected to the terminals U, V, W of the three-phase AC motor according to the correct phase sequence; if the phase sequence is connected incorrectly, the driver will issue an error alarm E.SE or E.OL2, and at this time, it is necessary to switch the phase sequence of any two phases. The standard wiring of the output side is shown in the following figure.

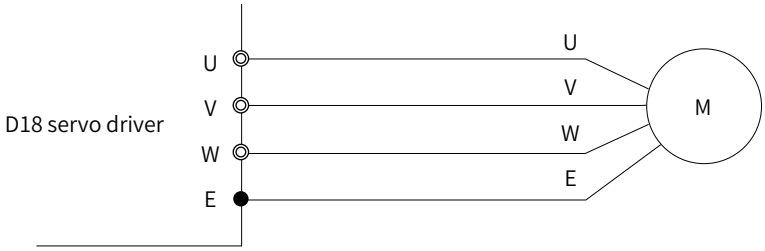

Caution

The AC servo driver must be well grounded to the motor, otherwise it will cause the driver to operate improperly or even burn out the driver.

Prohibition

- **It is absolutely prohibited to connect the input power cord to the output terminals.**

Do not connect the input power cord to the output terminals, as this may cause damage to the internal components of the controller.

- **Short-circuiting and grounding of the output terminals is absolutely prohibited.**

Do not touch the output terminals directly or touch the output wires to the controller housings, as there is a risk of electrical shock and short circuit. In addition, do not short the output wires.

- **The use of phase-shifting capacitors or LC/RC noise filters is absolutely prohibited.**

Do not connect a phase-shifting capacitor or LC/RC noise filter to the output circuit. Connecting and utilizing such parts can cause damage to the internal components of the controller.

- **It is absolutely forbidden to use an electromagnetic switch to turn the load on or off.**

Do not connect electromagnetic switches, magnetic contactors, etc. for switching on or off the load in the output circuit. When the controller is operating with a load, the surge current will cause the controller's protection circuit to act.

- **It is absolutely forbidden to connect the motor's fan to the driver's terminal U/V/W.**

It can cause the fan to burn out, resulting in short circuit of the driver output.

Wiring Distance between the Driver and Motor

The wiring distance between the AC servo driver and the motor should generally be less than 50 meters. If the distance is longer, select wires with a lower resistivity or contact the manufacturer.

Countermeasures for Inductive Interference

This information provides three methods of suppressing radio interference and inductive interference, i.e., filter rings, shielded cables, and output filters.

Filter magnetic ring

Installing a filtering magnetic ring on the output side near the driver can effectively suppress common mode interference on the output side. The installation diagram of the filtering magnetic ring is as follows:

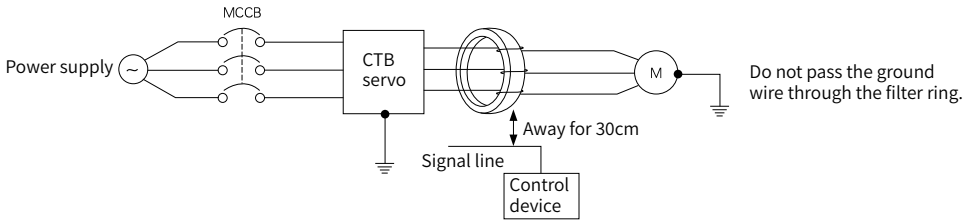

Output Shielded Cables

The use of shielded cables for the output line of the AC servo driver can effectively inhibit wireless interference and inductive interference. When the shielded cables are used, the two ends of the shield should be grounded separately. The connection of the shielded cables is shown in the figure below:

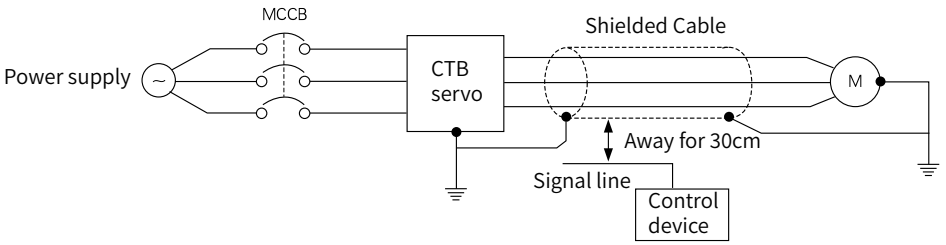

In cases where wireless interference is high, an output filter can be used to suppress the interference. Since the input side and the driver itself also generate wireless interference, it is most effective to use the input and output filters at the same time. The connection for suppressing wireless interference with an output filter is shown in the figure below:

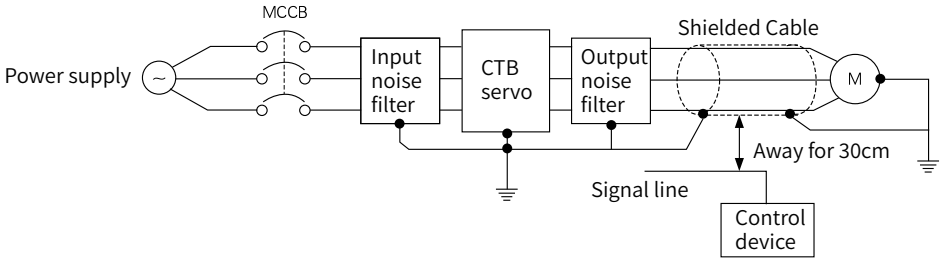

Connection of the Ground wire

- The grounding terminal is identified as E or ⏚; be sure to ground it well.
- Grounding resistance: 4Ω or less.
- Do not share ground wires with other power equipment such as welders.
- Please use the ground wire by selecting the wire diameter specification in accordance with the provisions of the technical standards for electrical equipment, and keep it as short as possible.
- Do not loop the ground wire where more than two drivers are used.
- Examples:

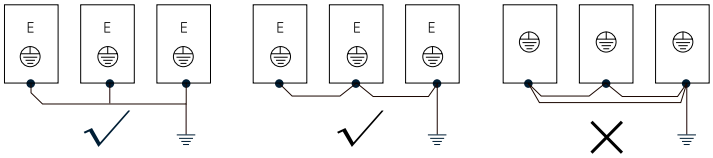

Connection of Braking Resistors

P and PB on the main circuit terminals of the AC servo driver are the terminals for connecting the braking resistor. Do not connect the braking resistor to terminals other than the above, otherwise the braking resistor will heat up abnormally and burn out, which may also cause damage to the driver. See the following table for selection of the braking resistor:

D18-XXXX		04A0	06A0	09A0	12A0	16A0	22A0	32A0	38A0	45A0	60A0	75A0	90A0	0110	0150	0180	0220	0280	0320
Braking Resistor	Power (W)	200	300	800	1500	1500	1500	1500	2000	2000	2000	2000	2500	2500	2500	2500	2500	2500	2500
	Resistance (Ω)	150	100	40	40	30	40	40	40	40	32	32	55	55	55	55	55	55	55
	Quantity	1	1	1	1	1	2	2	2	2	2	2	4	4	4	4	6	8	8
	Type	Ripple resistor or Al housed resistor											Ripple resistor						
Resistance box		NONE											884×400×155				884×400×294		

Note: The data above attached is the data recommended by the manufacturer's standard.

- The braking resistor is connected strictly according to the following diagram.
- The length of the wire connecting the driver to the braking resistor should be less than 50 meters.
- Please note in particular that the p(+)/DC+ and N(-)/DC- terminals of the driver can be connected to an additional braking unit. However, direct connection of a braking resistor is not permitted, as this may damage the driver or cause a fire.

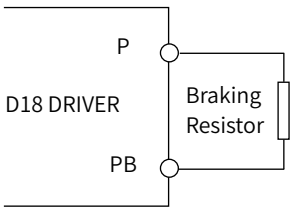

Braking Resistor, Profile of Braking Resistor Box and Mounting Size

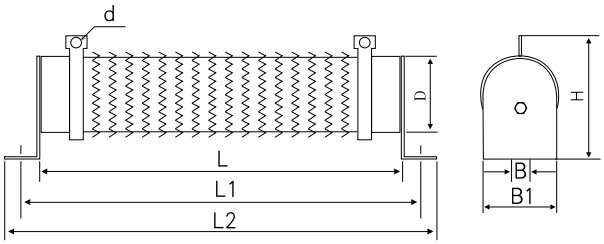

(Figure 1)

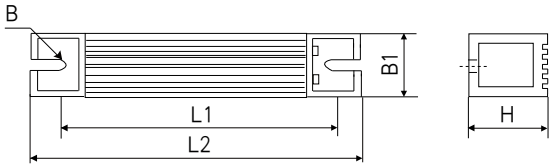

(Figure 2)

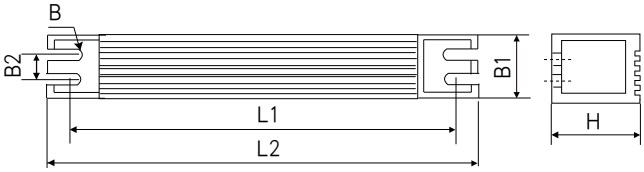

(Figure 3)

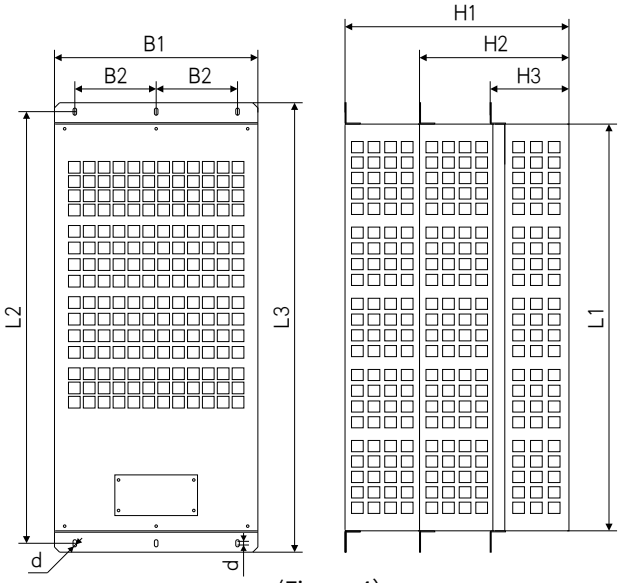

(Figure 4)

Braking Resistor Specification

Model	Power (W)	Resistance (Ω)	DIMENSIONS (MM)								Wiring Aperture	Weight (kg)	Remarks
			L	L_1	L_2	D	B	B_1	B_2	H	d		
B200W/150R	200	150	197	219	241	/	8	40	/	87.3	5.5	0.43	(Figure 1)
B300W/100R	300	100	284	306	328	/	8	40	/	81	5.5	0.62	
B800W/40R	800	40	324	346	368	/	8	50	/	99	6.5	0.95	
B1500W/30R	1500	30	414	439	464	/	8.5	60	/	119	6.5	1.72	
B1500W/40R	1500	40	414	439	464	/	8.5	60	/	119	6.5	1.72	
B2000W/32R	2000	32	509	534	559	/	8.5	60	/	119	6.5	2.02	
B2000W/40R	2000	40	509	534	559	/	8.5	60	/	119	6.5	2.02	
B2500W/55R	2500	55	599	624	649	/	8.5	60	/	119	6.5	2.45	
L200W/150R	200	150	/	153	171	/	5.5	60	/	30	5.2	0.46	(Figure 2)
L300W/100R	300	100	/	203	221	/	5.5	60	/	30	5.2	0.62	
L800W/40R	800	40	/	388	406	/	5.5	61	/	59	5.2	2.20	
L1500W/30R	1500	30	/	469	485	/	5.5	50	24.5	107	6	4.35	(Figure 3)
L1500W/40R	1500	40	/	469	485	/	5.5	50	24.5	107	6	4.35	
L2000W/40R	2000	40	/	536	550	/	5.2	100	80	50	6	4.90	
L2000W/32R	2000	32	/	536	550	/	5.2	100	80	50	6	4.90	

Profile of Braking Resistor Box and Mounting Size

Model	Max. number of resistors	DIMENSIONS (MM)								Wiring Aperture	Weight (kg)	Remarks
		L_1	L_2	L_3	B_1	B_2	H_1	H_2	H_3	d		
884×400×155	4	800	849	884	400	160	/	/	154.9	7	22.5	(Figure 4)
884×400×294	8	800	849	884	400	160	/	293.9	/	7	39	

Precautions for Wiring the Main Circuit:

- Be sure to connect a circuit breaker or fuse between the power supply and the power input terminals (R, S, T) of the driver.
- Be sure to connect a ground wire to the E terminal of the driver. The ground wire should be a copper core wire of 4 mm2 or more, with a grounding resistance less than 4 Ω.
- Be sure to ensure high reliability of each wiring connection.
- Please check the following items after completing the circuit connections.

(1)Are all connections correct?

(2)Are there any missing connections?

(3)Is there a short circuit between the terminals and connecting wires or a short to ground?

Wiring of Control Circuit

The input and output signals of D18 series AC servo drivers include: digital input signal, digital output signal, analog input signal, pulse input signal, and encoder input/output signal.

I/O Signal Cable Specifications

The cables used for the connectors have strict requirements due to different control signals. The following table lists the cable specifications required for different signal connectors, and users should follow this standard when wiring.

Signal Type	Signal Name	Cable Name	Cable Specifications (mm2)
Digital Input/Output	I1～I12 Q1～Q6 PV SC	Plain or shielded cable	0.2～2
Relay Output	M0A/M0B/M0C M1A/M1B/M1C	Plain or shielded cable	0.2～2
Analog Signal	FV FI FT FS TS FC	Shielded cable	0.2～1
Encoder Signal	PV1 G1 A+ A- B+ B- Z+ Z- PV2 G2 OA+ OA- OB+ OB- OZ+ OZ-	Twisted shielded cable	0.2～1
Pulse Signal	SA+ SA- PB+ PB- DZ+ DZ-	Twisted shielded cable	0.2～1
Enable Reset Signal	ST PV SC RET	Plain or shielded cable	0.2～1

D18-S CONTROL WIRING DIAGRAM

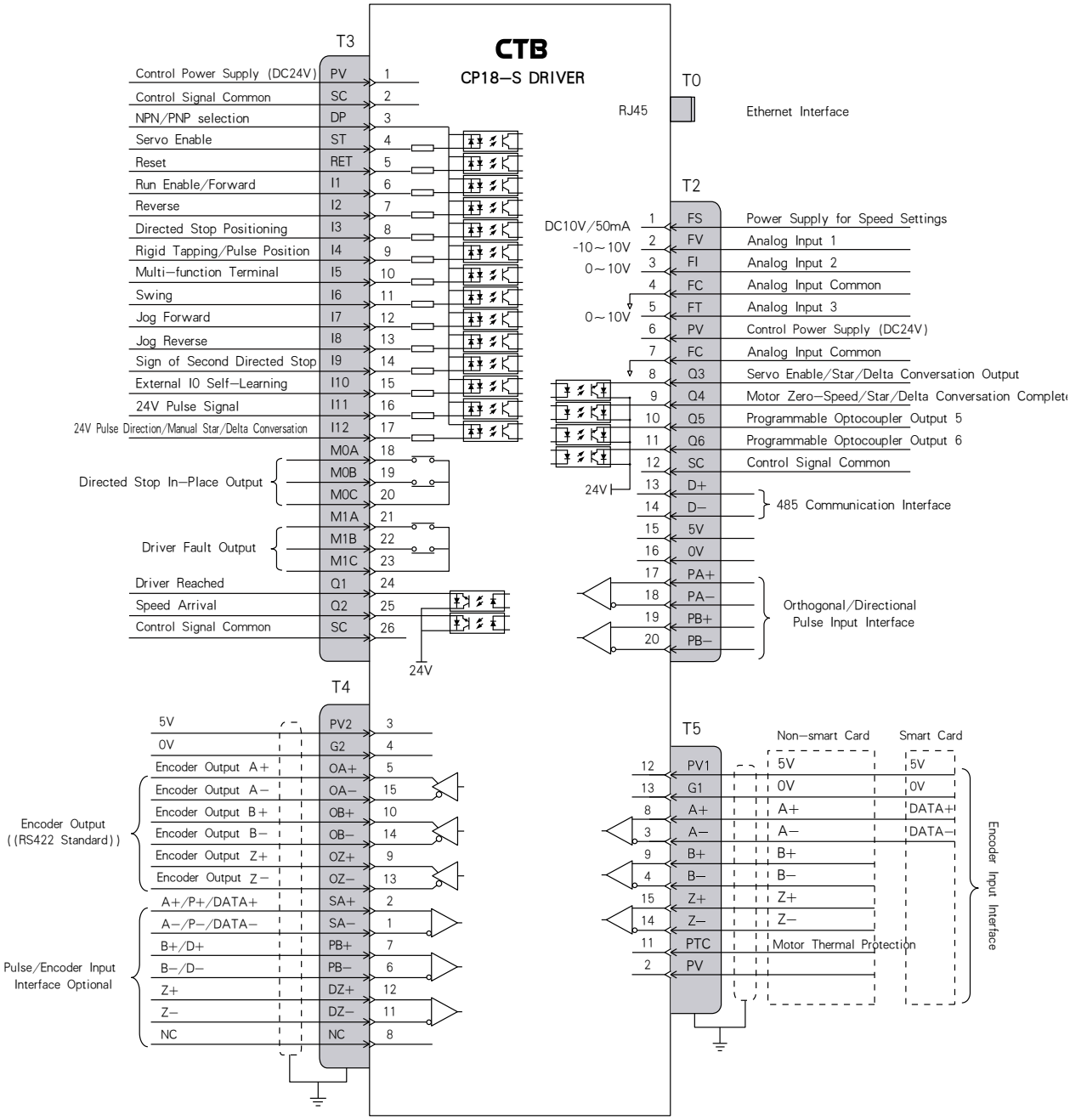

Note:

◆ Encoder signal lines need to be twisted shielded cables while analog input signal lines need to be shielded cables.

◆ This wiring diagram is schematic. The user may make specific technical inquiries or request official drawings from the manufacturer during electrical design.

Description of I/O Signals

Port	Type	Pin	Name	Function	Signal Standards
T0	Communication		Ethernet interface	Ethernet	Standard Ethernet
T2	Analog input	1	FS	Internal power supply 10V for speed setting	DC10V 50mA
		2	FV	Analog input of -10V to +10V	Analog signal
		3	FI	Analog input optional for 0～10V and 4～20mA	
		4/7	FC	Analog input common	0V
		5	FT	Analog input 0 to 10V	Analog signal
		6	PV	DC24V power terminal	DC24V 100mA
	Programmable photocoupler output	8/9/10/11	Q3/Q4/Q5/Q6	Programmable output	24V photocoupler output 10mA
	Control power supply	12	SC	Control signal common	DC24V 100mA
	485 communication interface	13/14	D+/D-	485 communication interface	RS485 standard
	Control power supply	15	5V	5V	
		16	0V	0V	
	Orthogonal/directional pulse input interface	17/18	PA+/PA-	Orthogonal/directional pulse input interface	RS422 standard
		19/20	DB+/DB-	Orthogonal/directional pulse input interface	
T3	Control power supply	1	PV	DC24V power terminals	DC24V 100mA
		2/26	SC	0V terminal of DC24V power supply / control signal common	
	NPN/PNP selection	3	DP	NPN/PNP selection; NPN when DP connects to PV, and PNP when DP connects to SC	NPN: 0V input valid PNP: 24V input valid
	Control signal input	4	ST	DC24V power terminals	
		5	RET	0V terminal of DC24V power supply / control signal common	
		6	I1	NPN/PNP selection; NPN when DP connects to PV, and PNP when DP connects to SC	
		7	I2	Control enable and reset	
		8	I3	Reset	
		9	I4	Run enable/clockwise	
		10	I5	Multifunction terminal, set by A2.30	
		11	I6	Swing	
		12	I7	Jog forward	
		13	I8	Jog reverse	
		14	I9	Second directed stop sign	
		15	I10	External IO self-learning	
		16	I11	Multi-function input	
		17	I12	Multi-function input	
	Programmable photocoupler output	24	Q1	Driver ready, set by A2.20	24V photocoupler output 10mA
		25	Q2	Speed reached, set by A2.21	
	Relay out	18/19/20	M0A/M0B/M0C	Directed stop completed, set by A2.22	AC125V 0.5A DC30 1A
		21/22/23	M1A/M1B/M1C	Driver fault output	
T4	Encoder output	5/15	OA+/OA-	Encoder A-phase output	RS422standard
		10/14	OB+/OB-	Encoder B-phase output	
		9/13	OZ+/OZ-	Encoder Z-phase output	
	Encoder pulse input	2/1	SA+/SA-	ENCODER A-PHASE / ORTHOGONAL PULSE A-PHASE INPUT / SINGLE PULSE COLUMN INPUT P/485 COMMUNICATION	RS422standard
		7/6	PB+/PB-	ENCODER B-PHASE / ORTHOGONAL PULSE B-PHASE INPUT / SINGLE PULSE DIRECTIONAL INPUT D	
		12/11	DZ+/DZ-	Encoder Z-phase	
		3/4	PV2/G2	Built-in power supply provided by the CNC system, and can not be connected when the system has no power-up detection.	DC5V 200mA
T5	COMMUNICATION ENCODER INPUT	12/13	PV1/G1	Terminal for encoder power supply / power supply common	DC5V 200mA
		8/3	A+/A-	A/INCREMENTAL/BUS	Relevant encoder standards
		9/4	B+/B-	B/INCREMENTAL	
		15/14	Z+/Z-	Z / INCREMENTAL	
	Thermal protection input	11	PTC	Motor thermal protection signal input (PT100/PT3C/KTY84/PTC125)	
	Control power supply	2	PV	DC24V power terminal	DC24V 100mA

D18-B CONTROL WIRING DIAGRAM

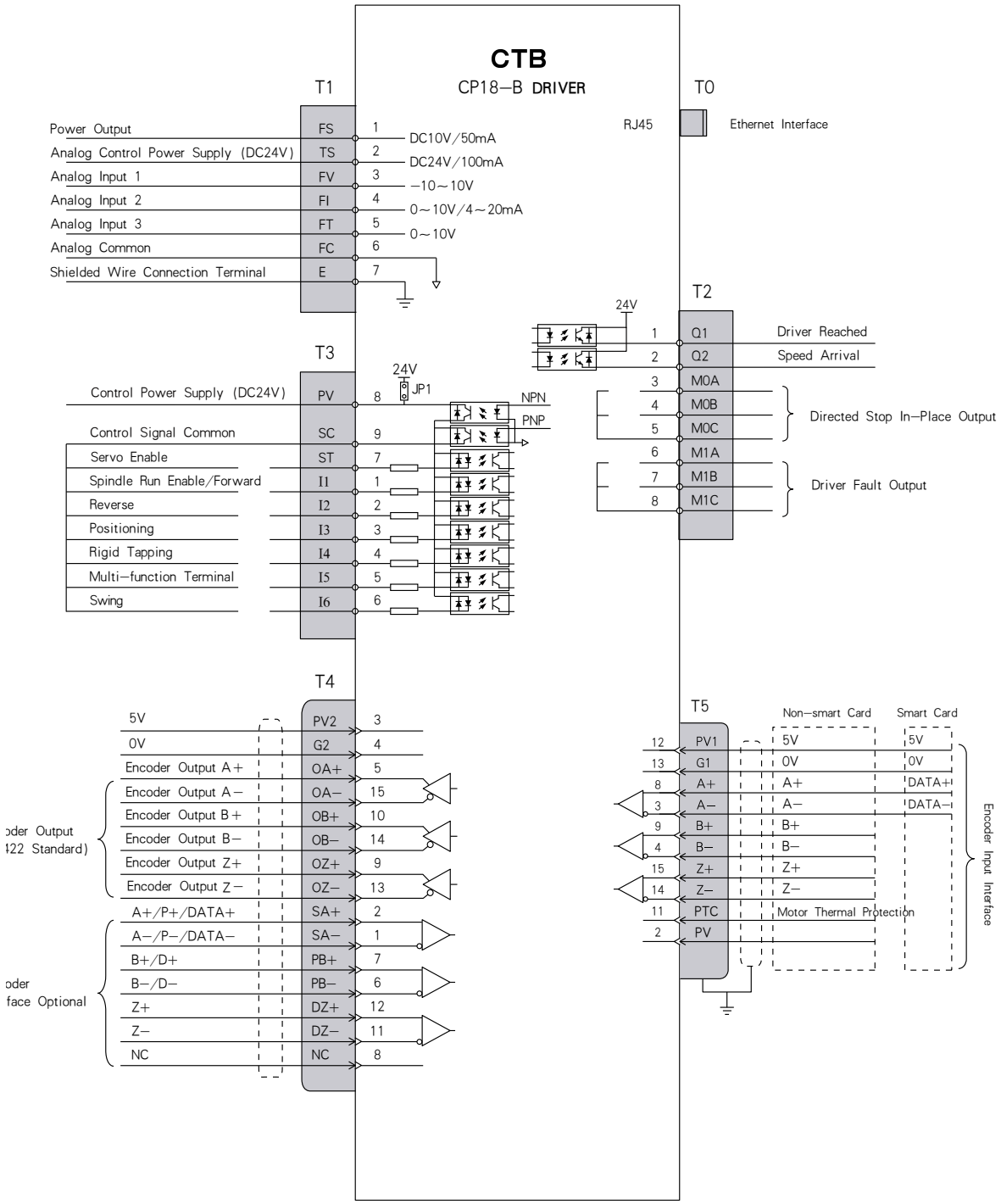

Note:

◆ Encoder signal lines need to be twisted shielded cables while analog input signal lines need to be shielded cables.

◆ This wiring diagram is schematic. The user may make specific technical inquiries or request official drawings from the manufacturer during electrical design.

Description of I/O Signals

Port	Type	Pin	Name	Function	Signal Standards
T0	Communication		Ethernet interface	Ethernet	Standard Ethernet
T1	Analog input	1	FS	Internal power supply 10V for speed setting	DC10V 50mA
		2	TS	Analog control power (DC24V)	
		3	FV	Analog input of -10V to +10V	
		4	FI	Analog input optional for 0～10V and 4～20mA	
		5	FT	Analog input of -10V to +10V	
		6	FC	Analog common	0V
		7	E	Shield	
T2	Programmable photocoupler output	1	Q1	Driver ready	24V photocoupler output 10mA
		2	Q2	Speed reached	
	Relay output	3/4/5	M0A/M0B/M0C	Directed stop in-place output	AC125V 0.5A DC30 1A
		6/7/8	M1A/M1B/M1C	Driver fault output	
T3	Control signal input	7	ST	Control enable	NPN: 0V input valid PNP: 24V input valid Select PNP or NPN input mode by software parameter settings.
		1	I1	CW/Run enable	
		2	I2	CCW	
		3	I3	Directed stop, closed: start and hold directed stop; disconnected: cancel directed stop	
		4	I4	Rigid tapping signal, closed: enter rigid tapping state	
		5	I5	Multi-function terminal	
		6	I6	Swing	
	Control power supply	8	PV	DC24V power terminal; 24V output when JP1 is on, 24V input when off	DC24V 100mA
		9	SC	0V terminal of DC24V power supply/control signal common	
T4	Encoder output	5/15	OA+/OA-	Encoder A-phase output	Line drive output RS422 standard
		10/14	OB+/OB-	Encoder B-phase output	
		9/13	OZ+/OZ-	Encoder Z-phase output	
	Encoder pulse input	2/1	SA+/SA-	Encoder A-phase / orthogonal pulse A-phase input / single pulse column input P/485 communication	RS422 standard
		7/6	PB+/PB-	Encoder B-phase / orthogonal pulse B-phase input / single pulse directional input D	
		12/11	DZ+/DZ-	Encoder Z-phase	
		3/4	PV2/G2	Built-in power supply provided by the CNC system, and can not be connected when the system has no power-up detection.	DC5V 200mA
T5	COMMUNICATION ENCODER INPUT	12/13	PV1/G1	Terminal for encoder power supply / power supply common	DC5V 200mA
		8/3	A+/A-	A/INCREMENTAL/BUS	Relevant encoder standards
		9/4	B+/B-	B/INCREMENTAL	
		15/14	Z+/Z-	Z / INCREMENTAL	
	Thermal protection input	11	PTC	Motor thermal protection signal input (PT100/PT3C/KTY84/PTC125)	
	Control power supply	2	PV	DC24V power terminal	DC24V 100mA

D18-E CONTROL WIRING DIAGRAM (D18-M AND D18-P SAME AS D18-E)

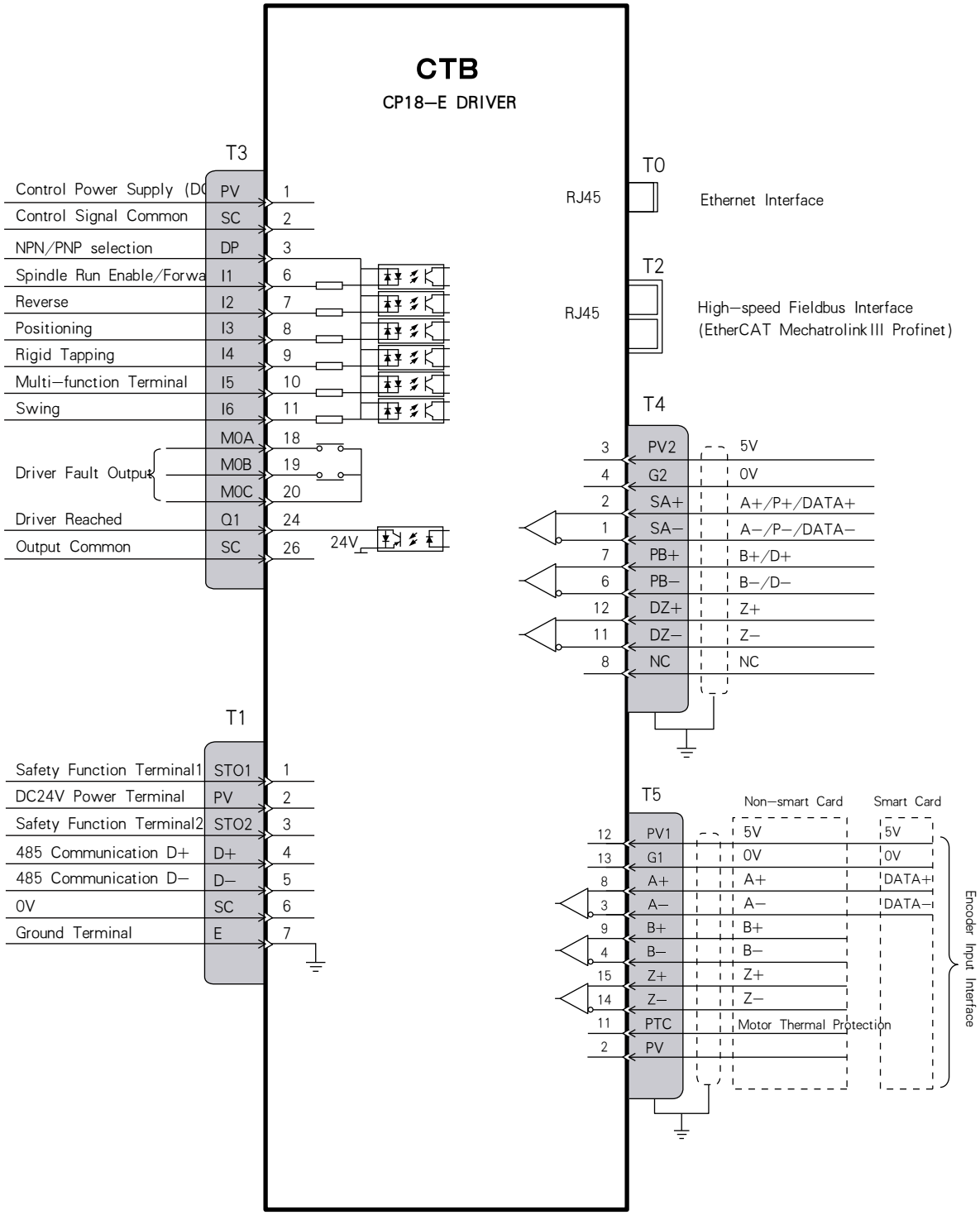

Note:

◆ Encoder signal lines need to be twisted shielded cables while analog input signal lines need to be shielded cables.

◆ This wiring diagram is schematic. The user may make specific technical inquiries or request official drawings from the manufacturer during electrical design.

Description of I/O Signals

Port	Type	Pin	Name	Function	Signal Standards
T0	Communication		Ethernet interface	Ethernet	Standard Ethernet
T1	Safety function terminal	1/3	STO1/STO2	Safety function input terminal	24V input valid
		2	PV	DC24V power terminal	
	485 communication	4/5	D+/D-	485 communication	RS485 standard
	Control power supply	6	SC	0V terminal of DC24V power supply/control signal common	DC24V 100mA
T2	High-speed bus interface			EtherCAT, Mechatrolink III , Profinet	Fieldbus
T3	Control power supply	1	PV	DC24V power terminal; 24V output when JP1 is on, 24V input when off	DC24V 100mA
		2/26	SC	0V terminal of DC24V power supply/control signal common	
	NPN/PNP selection	3	DP	NPN/PNP selection; NPN when DP connects to PV, and PNP when DP connects to SC	NPN: 0V input valid PNP: 24V input valid
		6	I1	CW/Run enable	
		7	I2	CCW	
		8	I3	Directed stop, closed: start and hold directed stop; disconnected: cancel directed stop	
		9	I4	Rigid tapping signal, closed: enter rigid tapping state	
		10	I5	Multi-function terminal	
		11	I6	Swing	
	Relay out	18/19/20	M0A/M0B/M0C	Directed stop in-place output	AC125V 0.5A DC30 1A
	Programmable optocoupler output	24	Q1	Driver ready	24V optocoupler output 10mA
T4	Encoder output	3/4	PV2/G2	Built-in power supply provided by the CNC system, and can not be connected when the system has no power-up detection.	DC5V 200mA
	Encoder pulse input	2/1	SA+/SA-	ENCODER A-PHASE / ORTHOGONAL PULSE A-PHASE INPUT / SINGLE PULSE COLUMN INPUT P/485 COMMUNICATION	RS422 standard
		7/6	PB+/PB-	ENCODER B-PHASE / ORTHOGONAL PULSE B-PHASE INPUT / SINGLE PULSE DIRECTIONAL INPUT D	
		12/11	DZ+/DZ-	Encoder Z-phase	
T5	COMMUNICATION ENCODER INPUT	12/13	PV1/G1	Terminal for encoder power supply / power supply common	DC5V 200mA
		8/3	A+/A-	A/INCREMENTAL/BUS	Relevant encoder standards
		9/4	B+/B-	B/INCREMENTAL	
		15/14	Z+/Z-	Z / INCREMENTAL	
	Thermal protection input	11	PTC	Motor thermal protection signal input (PT100/PT3C/KTY84/PTC125)	
	Control power supply	2	PV	DC24V power terminal	DC24V 100mA

Butt Driver Socket Plug Range

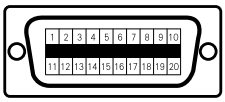

T2 20-pin high-density plug

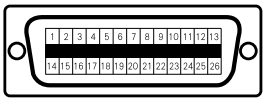

T3 26-pin high-density plug

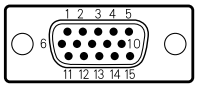

T4 D-type 15-pin plug (pin type)

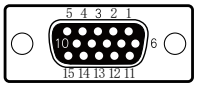

T5 D-type 15-hole plug (hole type)

Definition of Motor Side Encoder Interface

Definition of Rectangular Connector

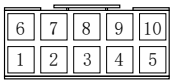

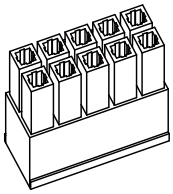

Definition of Rectangular Connector Interface

Pin No. / Singal (Color) / Encoder Type	1	2	3	4	5	6	7	8	9	10
Sin-Cos Encoder	E (shielded)	R+ (Grey)	B+ (Blue)	A+ (Green)	5V (Grayish pink)	T1 (Purple)	R- (Pink)	B- (Red)	A- (Yellow)	0V (White-green)
Incremental encoder	E (shielded)	Z+ (Yellow)	B+ (Green)	A+ (White)	5V (Red)	T1 (Purple)	Z- (Orange)	B- (Blue)	A- (Grey)	0V (Black)
Absolute encoder	E (shielded)	VB (Brown)	-	SD+ (Blue)	5V (Red)	T1 (Purple)	Z- (Dark brown)	-	SD- (Dark blue)	0V (Black)
Rotary encoder	-	REF+ (Red & white / orange & white)	COS+ (Red)	SIN+ (Yellow)	-	-	REF- (Yellow & white / black & white)	COS- (Black)	SIN- (Blue)	-
Smart card	E	VB	-	SD+	5V	PV	-	-	SD-	0V

Circular SC-CMV1AP10S-C

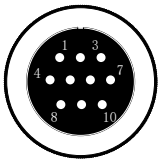

Interface Definition of Circular SC-CMV1AP10S-C Connector

Pin No. / Singal (Color) / Encoder Type	1	2	3	4	5	6	7	8	9	10
Sin-Cos Encoder	E (shielded)	R+ (Grey)	B+ (Blue)	A+ (Green)	5V (Grayish pink)	T1 (Purple)	R- (Pink)	B- (Red)	A- (Yellow)	0V (White-green)
Incremental encoder	E (shielded)	Z+ (Yellow)	B+ (Green)	A+ (White)	5V (Red)	T1 (Purple)	Z- (Orange)	B- (Blue)	A- (Grey)	0V (Black)

Circular YD28K15TS

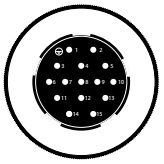

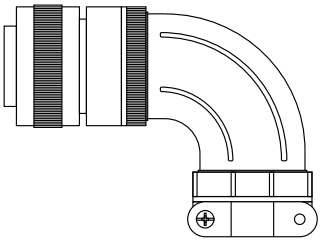

Interface Definition of Circular YD28K15TS Connector

Pin No. / Singal (Color) / Encoder Type	1	2	3	4	5	6	7	13	14	15
Incremental encoder	E (shielded)	A+	A-	B+	B-	Z+	Z-	T1	5V	0V
Sin-Cos Encoder	E (shielded)	A+	A-	B+	B-	R+	R-	T1	5V	0V
Rotary encoder	-	SIN+	SIN-	COS+	COS-	REF+	REF-	T1	-	-
Smart card	E	SD+	SD-	-	-	-	-	-	5V	0V
Absolute encoder	E (shielded)	SD+	SD-	-	-	VB+	VB-	T1	5V	0V

Circular WY20J12TE

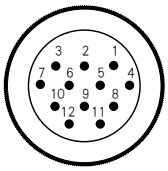

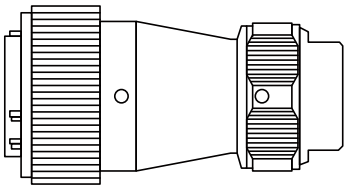

Interface Definition of Circular WY20J12TE Connector

Pin No. / Singal (Color) / Encoder Type	1	2	3	4	5	6	7	8	9	10	11	12
Sin-Cos Encoder	R- (Pinkwhite)	A- (Greyish white)	R+ (Pink)	A+ (Grey	T2 (Blue)	0V (Blue and white)	B- (Brown and white)	0V (Black and white)	B+ (Brown)	5V (Black)	T1 (Green)	0V (White-green)
Incremental encoder	Z- (Pinkwhite)	A- (Greyish white)	Z+ (Pink)	A+ (Grey	T2 (Blue)	0V (Blue and white)	B- (Brown and white)	0V (Black and white)	B+ (Brown)	5V (Black)	T1 (Green)	0V (White-green)

Wiring of Control Power Supply

In addition to the analog control terminals, the other control terminals of D18 series AC servo driver have optocoupler isolation. The power supply for optocoupler isolation can be provided internally by the driver or externally by the user according to the actual needs. In order to ensure better isolation, an external DC24V isolation power supply is recommended to be used by the user.

Wiring of Relay Output Signals

The D18 AC servo driver provides two relay outputs.

Output standard: AC125V 0.5A DC30V 1A

Schematic Diagram of Directed Stop Relay Output

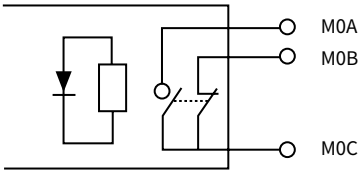

Schematic Diagram of Fault Relay Output

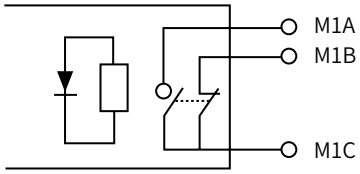

Precautions on Wiring Transistor Outputs

- The transistor output QI/Q2 has a max output with load capability of 10mA and its output voltage is DC24V.
- If 0V is required at the output terminals, an intermediate relay can be added as shown for conversion.
- If the output terminals drive inductive loads (e.g. electromagnetic relays, intermediate relays), a surge voltage absorption circuit should be added.

For example, add a fly-wheel diode to the surge absorbing circuit (for DC magnetic circuits; be sure to pay attention to the polarity during installation).

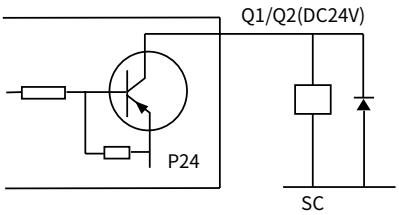

Transistor Output Circuit

Wiring of Analog Input Signals

The D18 AC servo driver provides three analog input interfaces FV, FI, and FT, as well as a set of power interfaces FS and FC for analog inputs. The description of the signal functions is shown in the table below:

Signal Message	Function	Signal Standard
FI FT	Unipolar analog input terminals	0～10V, input resistance: 20KΩ
FV	Bipolar analog input terminal	-10V～+10V, input impedance: 20KΩ
FS	Internal power supply for speed setting	DC10V，50mA
FC	Analog Common	0V
E	Shield terminal	0～10V, input resistance: 20KΩ

Wiring Requirements

- Use multi-core shielded cables or stranded shielded wires to connect sources or control signals.
- The cable shield (the end against the driver) should be attached to the connector housing.
- The control cables should be sufficiently far away from the main circuit and strong electric lines (including power cords, motor cords, relays, contactor lines, etc.) for more than 30cm when wiring, and avoid parallel layout. It is recommended that vertical wiring be used to prevent the driver from malfunctioning due to interference.
- Please use the factory-supplied filter rings for long-distance wiring, with the filter ring mounted close to the driver side.

Wiring Examples of FV Terminal

The CNC system uses a bipolar (-10V to +10V) analog input, where the speed is determined by the value of the analog and the steering is determined by the analog polarity, as shown in the figure below.

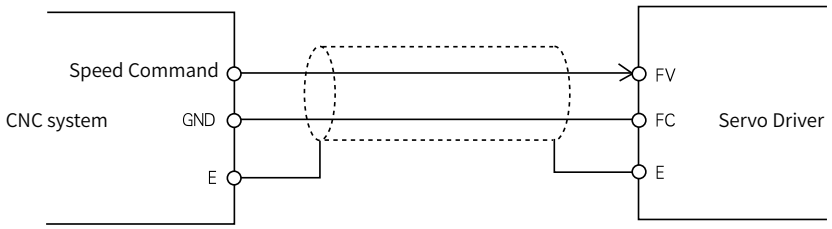

Prohibition

- It is forbidden to connect the signal line with OV inversely, which will easily burn out the signal source, and reverse operation will be caused in case of bipolarity.
- It is prohibited to connect high voltage to the analog signal terminals, which will burn out the driver.

Connection of Encoder Interfaces

A set of encoder input interface T5 and a set of encoder output interface T4 are provided on the motherboard of the D18 series AC servo driver.

Encoder Input Interface T5:

Signal Name	Description	Signal Standard
PV1	Encoder power supply DC5V	DC5V/200mA
G1	Encoder power ground 0V	
A+	A-phase pulse in-phase input (+)	Linear drive RS422 standard
A-	A-phase pulse inverted input (-)	
B+	B-phase pulse in-phase input (+)	
B-	B-phase pulse inverted input (-)	
Z+	Z-phase pulse in-phase input (+)	
Z-	Z-phase pulse inverted input (-)	
PTC	Motor thermal protection input terminal	Motor thermal protection signal

Encoder Input Interface T4:

Signal Name	Description		Signal Standard
PV2	Encoder power supply DC5V	or power supply for external sensors	DC5V/200mA Note: It is not necessary to be connected if it is used only as speed/ position feedback for the CNC system.
G2	Encoder power ground 0V		
OA+	A-phase pulse in-phase output (+)		Linear drive RS422 standard
OA-	A-phase pulse in-phase output (-)		
OB+	B-phase pulse in-phase output (+)		
OB-	B-phase pulse inverted output (-)		
OZ+	Z Phase pulse in-phase output (+)		
OZ-	Z-phase pulse inverted output (-)		
SA+	Pulse/encoder A phase input (+)		Linear drive RS422 standard
SA-	Pulse/encoder A phase input (-)		
PB+	Pulse/encoder B phase input (+)		
PB-	Pulse/encoder B phase input (-)		
DZ+	Pulse/encoder Z phase input (+)		
DZ-	Pulse/encoder Z phase input (-)		

Precautions on Encoder Wiring

- The encoder cables must be twisted shielded.
- The shield is to be connected to the connector housing.

⚠ Prohibition

- It is prohibited to reverse the encoder power supply, which may easily burn out the DC5V power supply of the driver or burn out the encoder.
- It is forbidden to reverse the phase sequence of phase A and B. Otherwise, the motor will operate abnormally or even burn out the motor or driver.

D18 DRIVER

3

Use of Controllers

This section describes the functions of the controllers and the ways of use.

Profile and Key Functions of the Controller.....3—2
Driver's Runing state.....3—3
Controller's Runing state.....3—4
How to Use the Controller.....3—4
Parameter Modification With the Controller.....3—5
Monitoring the Runing state with the Controller...3—5

Profile and Key Functions of the Controller

This section defines and describes the terms and nouns for the operation and state of the driver operator, and tells how to operate the operator and the driver. Please read it carefully, as it will help you to use the driver correctly.

Controller

The controller is the standard configuration of the driver. The operator allows the user to set parameters, monitor the state, and control the operation of the driver. Familiarizing yourself with the function and use of the controller is a prerequisite for use of the driver. Please read this instructions carefully before use.

Schematic Diagram of the Controller’ s Profile

The driver’ s controller is mainly composed of two parts, namely the LED digital tube and the keypad, and its profile and each functional area are shown in Figure 3-1.

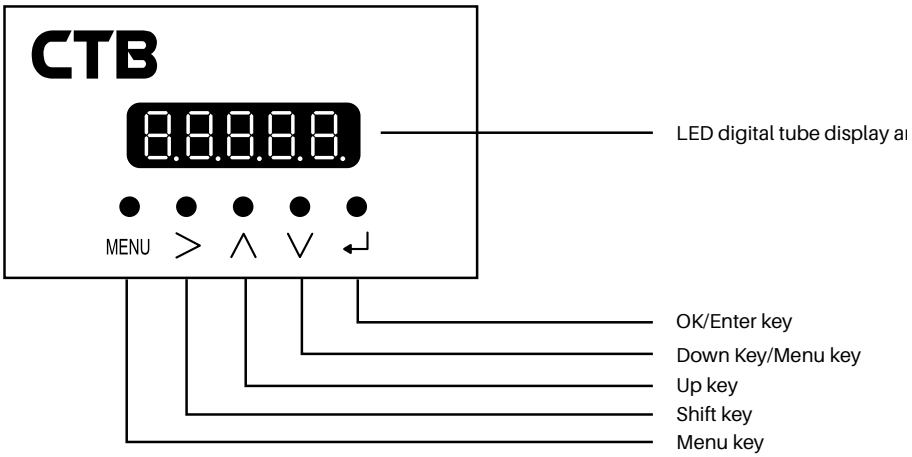

Figure 3-1 Schematic Diagram of Controller

Keys Description of the Controller

See Table 3-1 for a description of the controller’s key functions.

Table 3-1 Key Functions of the Controller

Key	Name	Function
MENU	Menu key	Shift key for each menu.
>	Shift key	Used to shift the data bit of the parameter number when browsing the parameters; Used to change the modified bit of the modified data when modifying the data in the programmed state.
∧	Up key	Incremental values for menus, parameters, or modified parameters.
∨	Down key	Decremental values for menus, parameters, or modified parameters. Shift key for each menu.
↵	OK/Enter key	Operating the key in the programmed state returns to the previous level of the menu; Enter the next level of the menu; Complete the selection of the parameter set in the first-level menu state; Complete access to values in the second level of the menu; Complete the modification and storage of parameter values in the third-level menu state.

Driver's Runing state

There are four working states after the driver is powered on: standby state, running state, editing state, and fault alarm state, which are described as follows:

Standby State

After the driver is powered on, it is in standby state when no operation control command is received. The function code of the default standby state display of LED digital tube is F.0. The LED can switch to display the parameter sets of U1, U2, U3, A1, A2, A3, Bn, Cn, Dn, En, Fn, Hn, Pn, and Sn through the MENU key. Press ↵ key and then press >, ∧ , ∨ key to switch cyclically to display the monitoring parameters defined in each function parameter set, and then press ↵ key to view/monitor their values.

To modify the contents of the Sn parameter set during use, it is restricted by the advanced password parameter Sn.00. Some of the Sn parameters can be modified when the advanced password is entered. The Sn system parameters are essential parameters of the driver and should be modified with caution.

Running State

When the driver is in the standby and fault-free state, it enters the running state after receiving the run command.

The LED can switch to display the parameter sets of U1, U2, U3, A1, A2, A3, Bn, Cn, Dn, En, Fn, Hn, Pn, and Sn through the MENU key. Press ↵ key and then press >, ∧, ∨ key to switch cyclically to display the monitoring parameters defined in each function parameter set, and then press ↵ key to view/monitor their values.

Editing State

The driver can switch to the state of modifying each parameter of function codes by MENU , >, ∧ , ∨, ↵ keys of the operation panel, which is the editing state.

The editing state can display the value of the function parameters, while the modified bit is in blinking display mode.

Fault Alarm State

A state in which the driver is faulty and displays a fault code.

The LED displays the fault code in the fault state, and the fault reset can be performed by >.

Controller's Runing state

Standby State:

When the driver is in standby, the state of the controller is shown in Figure 3-2. The LED digital tube displays F.0 by default. At this time, press the MENU key to access the various menus to access and modify the parameters.

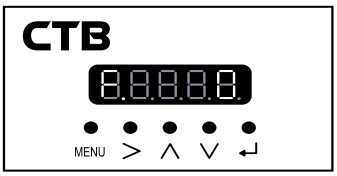

Figure 3-2 Standby State

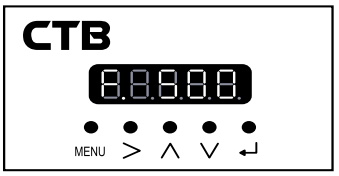

Figure 3-3 Runing state

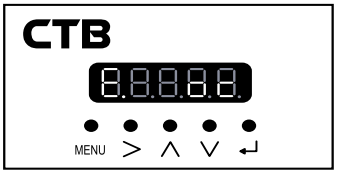

Figure 3-4 Fault Alarm State

Runing state:

When the driver receives the correct run command in the standby state, it enters the run state. As shown in Figure 3-3, at this time, the LED digital tube displays the set speed of the driver by default, such as E.500. In this state, press MENU key to enter each menu item to access or modify the operation of parameters.

Fault Alarm State:

When the driver is in the runing state, standby state and programming state, if a fault is detected, it will immediately shut down and enter the fault state, as shown in Figure 3-4.

In the event of a fault, the driver can be reset with the [>] key. If the fault has resolved, it returns to standby state; if the fault continues, the fault code will be displayed again.

How to Use the Controller

It focuses on the use of the controller and the basic operation of each function.

Process of Parameter Settings

The controller parameter settings of the driver adopts a three-level menu structure, which makes it easy and quick to query and modify the parameter values of each menu.

The three levels of menus are menus (first-level menu), parameters (second-level menu), and parameter set values (third-level menu). The operation flow is shown in Figure 3-5.

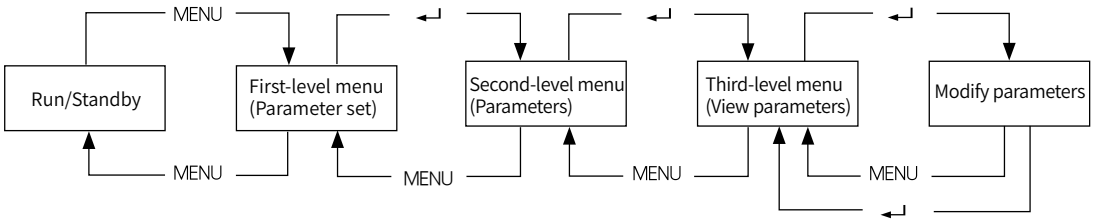

Figure 3-5 Flowchart of Three-level Menu

When operating in the three-level menu, a second-level menu can be returned to by pressing the MENU key or the ENTER key (see Figure 3-5, Figure 3-6). The difference between the two operations is that pressing the OK key stores the set parameter values into the controller and then returns to the secondary menu; pressing the Menu key returns directly to the secondary menu and no parameter values are stored. The specific operation flow and keys of the three-level menu are shown in Figure 3-6.

Parameter Modification With the Controller

Use the controller to modify the parameters, see Figure 3-6 for a flow chart.

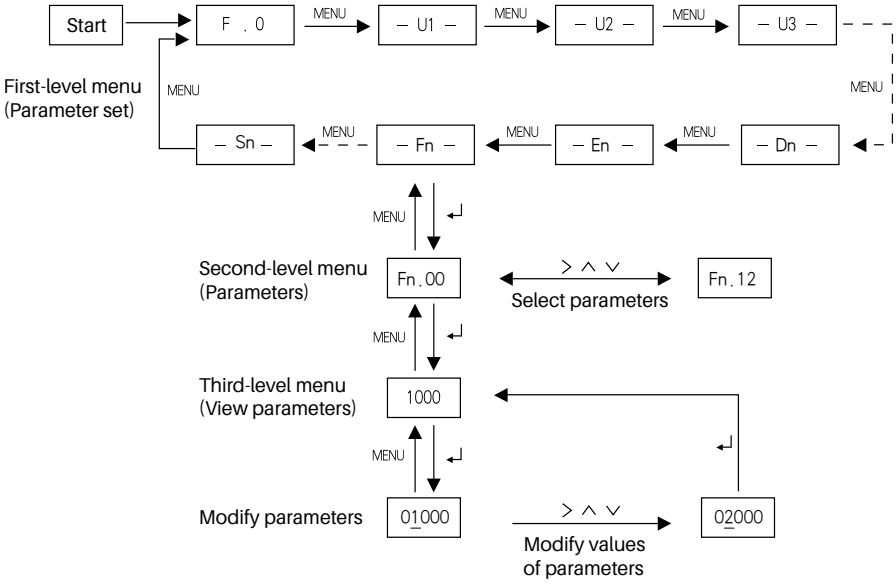

Figure 3-6 Flowchart of Three-level Menu

★ Note：

The first-level menu contains 14 menu items, namely: U1 menu, U2 menu, U3 menu, A1 menu, A2 menu, A3 menu, Bn menu, Cn menu, Dn menu, En menu, Fn menu, Hn menu, Pn menu, Sn menu.

Specific functions in the second-level menu are described in the parameter descriptions.

Monitoring of Running State by the Controller

The running state, interface state, and fault information of the driver can be monitored through the monitoring screen, U1, U2, and U3, respectively, with the controller.

Monitoring of Running State

The monitoring of the running state includes the driver’ s set speed F, output speed O, feedback speed b, output current A, output voltage U, bus voltage u, and output torque T. The monitoring method is shown in Figure 3-7。

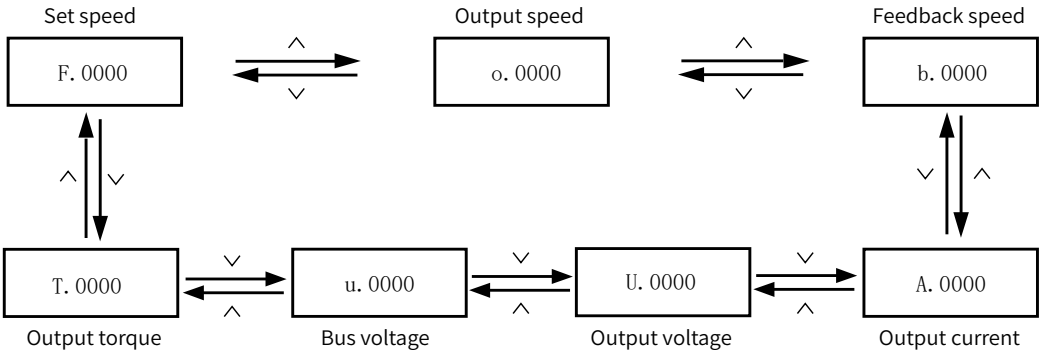

Figure 3-7 Flowchart for Monitoring the Driver Running State

U2 State Monitoring

The U2 state monitoring parameter set includes the encoder count values of the driver, U2.00 and U2.01; input points, U2.03 and U2.04, and output point, U2.05; analog inputs, U2.06, U2.07, and U2.08; analog outputs, U2.09, U2.10, and U2.11; angle values and pulse values for the current absolute position of the encoder, U2.14, U2.15, U2.16, and U2.17; the count values of the T2 and T3 pulse ports, U2.18 and U2.19; the driver temperature, U2.23; the motor temperature, U2.24; the driver states, U2.25, U2.26, U2.27, U2.28; and the driver power-up time, and the running time, U2.29 and U2.30;

The monitoring method is the same as checking the monitoring parameters, which only requires to select the corresponding parameters in U2. For details of the parameter numbers, see U2 Operation Monitoring Parameters List 2.

Fault Message Monitoring

When the driver is in fault status, the control board will display the current fault message code. To view the fault record of the driver, it can be viewed through U3. The operation of viewing is the same as viewing the monitoring parameters, with only the corresponding parameter selected in U3. The parameter number is shown in detail in the Parameter List U3 of the Fault State Records.

D18 DRIVER

4

Trial operation

This section describes the methods and precautions for initial trial operation of the driver.

Basic Process for Trial Operation.....4-2
Wiring Verification of Main Circuit.....4-2
Parameter Verification of Motor and Driver.....4-3
Trial Operation with Loads.....4-3

Basic Process for Trial Operation

When the driver is first powered up for operation, follow the process below, otherwise it is prone to accidents, as well as damage to equipment or other hazards.

Installation checks	1.Verify that the mounting screws of the driver are tightened. 2.Verify that the driver accessories, and mounting screws for the AC reactor and braking resistor, etc., are tightened.
Main circuit wiring checks	1.Verify that the power inlet, driver outlet (phase sequence), AC reactor wiring, and brake circuit wiring (polarity) are correct. 2.Verify that the above wiring has been connected tightly.
Control circuit wiring checks	1.Verify that the control circuit wiring is correct. 2.Verify that the above wiring has been connected tightly.
Power-up checks	1.Observe whether the driver’s power-up process is correct. Verify that no error occurs when the driver is powered up.
Adjustment of driver parameters	1.Verify the driver parameters and motor parameters. Verify relevant control parameters.
No-load test operation	1.Detecting the running state, output speed, current, and torque etc. of the driver. 2.Observe the operation, noise, vibration, temperature rise, etc. of the motor. 3.Adjust the relevant control parameters initially.
Test operation with loads	1.Observe the running state of the driver and motor as described in the previous process. 2.Further adjust the relevant control parameters. 3.Perform a long test-operation.

Wiring Verification of Main Circuit

Please verify the following for the main circuit wiring:

1.The wiring on the driver R/S/T is connected to a three-phase, industrial-frequency power supply with a supply voltage meeting the requirements of the driver.

2.The driver has a built-in braking unit with the braking resistor connected to P/PB. There must not be any wiring on the N terminal.
3.When connecting the output terminals of the driver to the motor, it must be ensured that the phase sequence is the same. Otherwise, the motor can not run normally, with the possibility of burning the device. When the output cables are shielded, connect the shield at both ends of the cable to the ground terminals of the driver and motor respectively.
4.When the output line is equipped with a filter ring, the filter ring should be as close as possible to the driver side. The shield and ground wire should not pass through the magnetic ring, and the magnetic ring should not contact the U/V/W terminals.
5.The driver and motor must be well grounded.
6.Verify that all wiring connections are tight.

⚠ Caution

● The driver must be carefully checked for wiring before initial power-up, otherwise accidents may easily occur.

Parameter Verification of Motor and Driver

The default parameters of D18 series AC servo drivers are basically in line with the actual application, with most parameters no need to be modified. If the user uses it for the first time, some parameters should be modified or verified if necessary.

Parameters to be Verified Before Trial Operation

- Motor and driver parameters D1, D1.00 to D1.05.
- Basic control parameter A2, A2.00 to A2.38.
- Control-related parameters A3, A3.00 to A3.66.

Trial Operation with Loads

The following should be noted during trial operation with the driver under load:
1.Loading gradually, i.e. the load should be increased from small to large. Check or contact the manufacturer if an overload is found.
2.When loading, it is required to constantly monitor the feedback speed, output current and output torque of the driver; constantly observe the vibration, noise and temperature rise of the motor, and stop the machine in time when it is found to be abnormal.
3.When adjusting the motor parameters, stop the operation before proceeding to avoid accidents. Do not adjust the parameters too much.
4.Do not perform overloading tests, or destructive tests to avoid burning the driver or motor.

⚠ Caution

When the following conditions are found, stop the machine immediately for checks, or contact the manufacturer.

1.The feedback speed, output current, and output torque of the driver fluctuate greatly or reach limit values.
2.Abnormal motor operation, as well as abnormal vibration and noise.
3.Abnormalities in mechanical equipment.

D18 DRIVER

5

Parameters List

This section describes all the parameters of the driver.

U1 State Monitoring Parameter Set.....5-2
U2 State Monitoring Parameter Set.....5-3
U3 Fault Message Parameter Set.....5-6
A1 Basic Parameter Set.....5-7
A2 User Parameter Set.....5-11
A3 User Parameter Set.....5-15
Bn Bus Parameter Set.....5-21
Cn Control Parameter Set.....5-27
Dn Motor Parameter Set.....5-33
En Encoder Parameter Set.....5-38
Fn Function parameter set.....5-45
Hn Interface Parameter Set.....5-52
Pn Protection Parameters.....5-60
Sn System Parameter Set.....5-66

Description of List of Parameters

The contents of the parameter list are described below:

Function code: parameter set and parameter number code;
Name: the name of the parameter;
Description: Detailed description of the function of the parameters and valid set values;
Set range: The range of valid set values for the parameters;
Unit: the unit of the parameter setting value;
Default settings: The original default settings of the parameters;
Change: The change attributes of the parameters (i.e., whether changes are allowed and the conditions for changes):
"○" : It indicates that the set value of this parameter is in the shutdown and running state of the driver, and can be changed;
"×" : It indicates that the set value of this parameter is in the servo-enable state of the driver and cannot be changed;
"∗" : It indicates that the value of the parameter is the recorded value of the actual test and cannot be changed.
"△" : It indicates that the set value of this parameter needs to be re-powered up after change to take effect.
Applicable motor: Applicable motor type:
Synchronous: it indicates that the parameter applies only to synchronous motors;
Asynchronous: it indicates that the parameter is only applicable to asynchronous motors;
Synchronous/asynchronous: it indicates that the parameter is applicable to both synchronous and asynchronous motors;

U1 State Monitoring Parameter Set

Function Code	Name	Description	Unit	Change	Applicable motor
U1.00	Set speed/frequency	When the max. speed is <10000rpm, the display shows the speed. When the max. speed is ⩾ 10000rpm, the display shows the frequency.	Speed: rpm Frequency: Hz	○	Synchronous/ asynchronous
U1.01	Output speed/frequency			∗	Synchronous/ asynchronous
U1.02	Feedback speed/frequency			∗	Synchronous/ asynchronous
U1.03	Output current	Monitored driver output current	A	∗	Synchronous/ asynchronous
U1.04	Output voltage	Monitored driver output voltage	V	∗	Synchronous/ asynchronous
U1.05	DC bus voltage	Monitored DC bus voltage (voltage of AC power cord × 1.414)	V	∗	Synchronous/ asynchronous
U1.06	Output torque	Monitored motor output torque, displayed as a percentage of the motor's rated torque	%	∗	Synchronous/ asynchronous

U2 State Monitoring Parameter Set

Function Code	Name	Description	Unit	Change	Applicable motor
U2.00	Motor encoder count value	Count value of the monitored motor encoder	Pulse	*	Synchronous/ asynchronous
U2.01	Second encoder count value	4x count for encoder input 1x count for single pulse input 4x count for double pulse input	Pulse	*	Synchronous/ asynchronous
U2.02	Following error	Following error	Pulse	*	Synchronous/ asynchronous
U2.03	State of input points I1 to I6, ST, RST	Input point state, active high with the order from left to right: I6 I5 I4 I3 I2 I1 RST ST	—	*	Synchronous/ asynchronous
U2.04	State of input points I7 to I12	Input point state, active high with the order from left to right: Null Null I12 I11 I10 I9 I8 I7	—	*	Synchronous/ asynchronous
U2.05	State of output points M0, M1, Q1 to Q6	Output point state, active output with the order from left to right: M1 M0 Q6 Q5 Q4 Q3 Q2 Q1	—	*	Synchronous/ asynchronous
U2.06	Analog input FV digital	Analog -10～0～+10V Digital 0～2047～4095	—	*	Synchronous/ asynchronous
U2.07	Analog input FI digital	Analog 0～+10V Digital 0～4095	—	*	Synchronous/ asynchronous
U2.08	Analog input FT digital	Analog 0～+10V Digital 0～4095	—	*	Synchronous/ asynchronous
U2.09	FV analog input voltage	Input voltage monitoring for FV analog	V	*	Synchronous/ asynchronous
U2.10	FI analog input voltage	Input voltage monitoring for FI analog	V	*	Synchronous/ asynchronous
U2.11	FT analog input voltage	Input voltage monitoring for FT analog	V	*	Synchronous/ asynchronous
U2.12	Analog output DA1 digital	Analog -10～0～+10V Digital 0～2047～4095	—	*	Synchronous/ asynchronous
U2.13	Analog output DA2 digital	Analog -10～0～+10V Digital 0～2047～4095	—	*	Synchronous/ asynchronous
U2.14	Current absolute position angle value of motor encoder	Current absolute position of the motor encoder	deg	*	Synchronous/ asynchronous
U2.15	Current absolute position pulse count value of the motor encoder	The pulse count value of the current absolute position of the motor encoder	Pulse	*	Synchronous/ asynchronous
U2.16	Current absolute position angle value of the second encoder	Current absolute position angle value of the second encoder	deg	*	Synchronous/ asynchronous
U2.17	Single-turn relative pulse position pulse count value of the second encoder	Pulse count value of the current single-turn position of the second encoder relative to the pulse position of the zero point of the second encoder	Pulse	*	Synchronous/ asynchronous
U2.18	T2 pulse port count value	T2 pulse port count value	Pulse	*	Synchronous/ asynchronous
U2.19	T3 pulse port count value	T3 pulse port count value	Pulse	*	Synchronous/ asynchronous
U2.20	T2 pulse velocity	T2 pulse velocity with a resolution of 0.0001 rpm	rpm	*	Synchronous/ asynchronous
U2.21	T3 pulse velocity	T3 pulse velocity with a resolution of 0.0001 rpm	rpm	*	Synchronous/ asynchronous

Function Code	Name	Description	Unit	Change	Applicable motor
U2.22	Second encoder / T4 pulse velocity	Second encoder/T4 pulse velocity with a resolution of 0.0001 rpm	rpm	*	Synchronous/ asynchronous
U2.23	Driver temperature	Monitor driver module temperature	℃	*	Synchronous/ asynchronous
U2.24	Motor temperature	Monitoring of motor tempera	℃	*	Synchronous/ asynchronous
U2.25	Driver state 1	bit0: servo power up bit1: servo ready bit2: servo running bit3: Fault bit4: CW bit5: CCW bit6: acceleration bit7: deceleration bit8: speed reached bit9: zero speed reached bit10: Positioning run bit11: coarse positioning completed bit12: Fine positioning completed bit13: Positive torque output state bit14: Anti-torque output state bit15: Torque reached	—	*	Synchronous/ asynchronous
U2.26	Driver state 2	bit0: zero torque state bit1: pole position learning completed bit2: Motor self-tuning completed bit3: Holding brake output bit4: software positive limit reached bit5: the software anti-limit is reached bit6: hardware positive limit reached (DI designation as positive limit is required) bit7: hardware anti-limit bit reached (DI designation as anti-limit bit required) bit8: speed limit reached bit9: Torque limit reached bit10: electric state bit11: brake state bit12: motor star connection/delta connection bit13: star/delta/motor conversion in progress bit14: Analog learning fault flag bit15: First encoder Z-pass active	—	*	Synchronous/ asynchronous
U2.27	Driver state 3	bit0: second encoder Z-pass active bit5: learning inertia status, 1 active bit6: second torque control activated bit7: Out-of-phase detection complete bit14: following error within coarse range bit15: following error within fine range	—	*	Synchronous/ asynchronous
U2.28	Driver state 4	Reserved	—	*	Synchronous/ asynchronous
U2.29	Driver power-up time	It displays the cumulative power-up time of the driver	h	*	Synchronous/ asynchronous
U2.30	Driver runtime	It displays the cumulative running time of the driver	h	*	Synchronous/ asynchronous
U2.31	Current torque display	Current torque display	Nm	*	Synchronous/ asynchronous
U2.32	Monitoring of acceleration time	It shows the current actual acceleration time	ms	*	Synchronous/ asynchronous
U2.33	Monitoring of deceleration time	It shows the current actual deceleration time	ms	*	Synchronous/ asynchronous

Function Code	Name	Description	Unit	Change	Applicable motor
U2.34	Encoder compensation in arc seconds	It displays the encoder accuracy compensation value	sec	*	Synchronous/ asynchronous
U2.35	Single-gear compensation data	It displays the single-gear compensation value	pul	*	Synchronous/ asynchronous
U2.36	Current power factor	It displays the current power factor	—	*	Synchronous/ asynchronous
U2.37	Current active power	It displays the active power of the current output	kw	*	Synchronous/ asynchronous

U3 Fault Message Parameter Set

Function Code	Name	Description	Unit	Change	Applicable motor
U3.00	Latest alarm code	Alarm code of the current driver	—	*	Synchronous/ asynchronous
U3.01	Fault before first alarm	It displays the contents of the fault that occurred before the first alarm	—	*	Synchronous/ asynchronous
U3.02	Fault before second alarm	It displays the contents of the fault that occurred before the second alarm	—	*	Synchronous/ asynchronous
U3.03	Fault before third alarm	It displays the contents of the fault that occurred before the third alarm	—	*	Synchronous/ asynchronous
U3.04	Fault before fourth alarm	It displays the contents of the fault that occurred before the fourth alarm	—	*	Synchronous/ asynchronous
U3.05	Fault before fifth alarm	It displays the contents of the fault that occurred before the fifth alarm	—	*	Synchronous/ asynchronous
U3.06	Fault before sixth alarm	It displays the contents of the fault that occurred before the sixth alarm	—	*	Synchronous/ asynchronous
U3.07	Fault before seventh alarm	It displays the contents of the fault that occurred before the seventh alarm	—	*	Synchronous/ asynchronous
U3.08	Fault before eighth alarm	It displays the contents of the fault that occurred before the eighth alarm	—	*	Synchronous/ asynchronous
U3.09	Fault before ninth alarm	It displays the contents of the fault that occurred before the ninth alarm	—	*	Synchronous/ asynchronous
U3.10	First fault time	Servo power-up time when the first fault occurs	h	*	Synchronous/ asynchronous
U3.11	Second fault time	Servo power-up time when the second fault occurs	h	*	Synchronous/ asynchronous
U3.12	Third fault time	Servo power-up time when the third fault occurs	h	*	Synchronous/ asynchronous
U3.13	Fourth fault time	Servo power-up time when the fourth fault occurs	h	*	Synchronous/ asynchronous
U3.14	Fifth fault time	Servo power-up time when the fifth fault occurs	h	*	Synchronous/ asynchronous
U3.15	Sixth fault time	Servo power-up time when the sixth fault occurs	h	*	Synchronous/ asynchronous
U3.16	Seventh fault time	Servo power-up time when the seventh fault occurs	h	*	Synchronous/ asynchronous
U3.17	Eighth fault time	Servo power-up time when the eighth fault occurs	h	*	Synchronous/ asynchronous
U3.18	Ninth fault time	Servo power-up time when the ninth fault occurs	h	*	Synchronous/ asynchronous

A1 Basic Parameter Set

Function code	Name	Description	Unit	Parameter range	Default settings	Change	Applicable motor
A1.00	Parameter level selection	0:User-level parameters 1:Advanced parameters	—	0，1	0	○	Synchronous/ asynchronous
A1.01	Control mode selection	0: V/F control 1: Open-loop vector control 2: Closed-loop vector control 3: Motor model control	—	0～3	3	×	Synchronous/ asynchronous
A1.02	Command mode selection	0: Terminal operation mode 1: Panel operation mode 2: Fieldbus mode 3: Multi-function terminal	—	0～3	0	×	Synchronous/ asynchronous
A1.03	Control mode	0: Speed control 1: Position control 2: Torque control 3: Current control	—	0～3	0	○	Synchronous/ asynchronous
A1.04	Parameter self-identification	121: Stationary learning motor parameters 221: Rotary learning motor parameters	—	0～65535	0	○	Synchronous/ asynchronous
A1.05	Enable disabled	0: Invalid 1: Disable any way to enable	—	0，1	0	○	Synchronous/ asynchronous
A1.06 ～ A1.09	Reserved	—	—	—	—	—	—
A1.10	Area of parameter use	1: Flash data area 2: Flash backup area 3: Default parameter area 123: MRAM	—	0～65535	0	∗	Synchronous/ asynchronous
A1.11	Parameter backup	400: Backup parameter settings 401: Clear backup parameters	—	0～65535	0	×	Synchronous/ asynchronous
A1.12	Parameter recovery	9055: Restore parameter settings	—	0～65535	0	△	Synchronous/ asynchronous
A1.13	Memory triggered by special address parameters	1: Triggered memory, with parameters automatically cleared when memory ends; This function only takes effect on EE memory chip motherboards like D18 and GH5AH, and only in PLC control mode; the memory parameters are D3980~D3999. Alarm mechanism: (1) Only one memory can be triggered within 5ms, i.e. if two or more memory requests are triggered consecutively for 5ms then it will alarm E.PLC. (2) Memory can only be triggered 300 times in 30s; if this limit is exceeded, it will alarm E. PLC.	—	0，1	0	○	Synchronous/ asynchronous
A1.14 ～ A1.36	Reserved	—	—	—	—	—	—

Function code	Name	Description	Unit	Parameter range	Default settings	Change	Applicable motor
A1.37	Bus monitor 1	Monitored bus data: MII: Bus Monitor 1 displays the master control word value; MIII: Bus Monitor 1 displays the main command value; Bus monitor 2 displays the subcommand value: EtherCAT: Bus monitor 1 displays the value of 6060; Bus Monitor 2 displays the value of 6040; Bus Monitor 3 displays the value of 6041.	—	0～65535	0	∗	Synchronous/ asynchronous
A1.38	Bus monitor 2						
A1.39	Bus monitor 3						
A1.40	Master frequency for dual servo torque synchronization	This parameter is only valid in the synchronous program for dual servo torque. It is configured to display the output frequency when the dual servo torque is synchronized to the host station. The output frequency ranges from 100 kHz to 900 kHz, matching the max. output current in the negative direction to the max. output current in the positive direction; The max. output current is calculated from the rated motor current and Cn10;	kHz	100.0～ 900.0	0	∗	Synchronous/ asynchronous
A1.41	Slave frequency for dual servo torque synchronization	This parameter is only valid in the dual servo torque synchronization program; It is configured to display the input frequency when the dual-servo torque is synchronized to the slave station. The input frequency ranges from 100 kHz to 900 kHz, matching the max. output current in the negative direction to the max. output current in the positive direction; The max. output current is calculated from the rated motor current and Cn10;	kHz	100.0～ 900.0	0	∗	Synchronous/ asynchronous
A1.42	Anti-shake gain for dual servo torque synchronization	Used for solving the gear breaking and shaking in light load during dual servo torque synchronization, and valid when Fn.67=1; Light load curve is planned by three parameters from A1.42 to A1.44, see "Dual Servo Torque Synchronization Program" for details.	%	0～100	20	×	Synchronous/ asynchronous
A1.43	Anti-shake interval 1 for dual servo torque synchronization		%	0～100.0	20	×	Synchronous/ asynchronous
A1.44	Anti-shake interval 2 for dual servo torque synchronization		%	0～100.0	50	×	Synchronous/ asynchronous
A1.45	Reserved	—	—	—	—	—	—
A1.46							
A1.47	Accuracy compensation selection	0: Off 1: Compensation of 4096 points 2: Fully automatic compensation	—	0～2	0	×	Synchronous/ asynchronous

Function code	Name	Description	Unit	Parameter range	Default settings	Change	Applicable motor
A1.48 ~ A1.59	Reserved	—	—	—	—	—	—
A1.60	Automatic compensation activated	0: Inactive 1: Activate detection compensation It will be cleared automatically when the compensation operation ends	—	0，1	0	×	Synchronous/ asynchronous
A1.61	Offset of compensated data point	It's used to monitor automatically acquired data for compensated data points, and A1.62 displays the data in the offset A1.61 address in the compensated data set	—	0～511	0	○	Synchronous/ asynchronous
A1.62	Data of compensated data point		〃	-32767～32767	0	∗	Synchronous/ asynchronous
A1.63	Automatic compensation data polling activated	It's used to start monitoring the use of automatically compensated data. When polling is enabled, A1.61 and A1.64 will automatically increase, and the corresponding values of A1.62 and A1.65 will also change. At this time, a computerized oscilloscope can be used to print out the auto-compensated data. 0: Stop 1: Polling for 30ms 2: Polling for 5ms	—	0～2	0	○	Synchronous/ asynchronous
A1.64	Data address for single-gear compensation	It is used to monitor the automatically acquired differential compensation point data, and A1.65 displays the data at offset A1.64 address in the compensated data set.	—	0～4095	0	○	Synchronous/ asynchronous
A1.65	Data monitor for single-gear compensation		pul	-32767～32767	0	∗	Synchronous/ asynchronous
A1.66	Compensation state	Used to monitor whether compensation is active or not bit0: Integral compensation active bit1: Differential compensation active	—	0～65535	0	∗	Synchronous/ asynchronous
A1.67 ～ A1.68	Reserved	—	—	—	—	∗	Synchronous/ asynchronous
A1.69	Current filtering time	Current filtering time, current display filtering time, the larger the display, the more stable it is, but the greater the display lag	ms	5～200	10	○	Synchronous/ asynchronous
A1.70 ～ A1.79	Alarm latch message	It is used to latch the message when various alarms are raised. The contents latched under different alarms are different, please refer to the Alarm Latch Message Sheet for more details.	—	—	—	∗	Synchronous/ asynchronous
A1.80	IPM Motor Id Index 1	d-axis current when max. torque x 1/10 in IPM motor index table	A	0～6553.5	0	×	Synchronous/ asynchronous
A1.81	IPM Motor Id Index 2	d-axis current when max. torque x 2/10 in IPM motor index table	A	0～6553.5	0	×	Synchronous/ asynchronous

Function code	Name	Description	Unit	Parameter range	Default settings	Change	Applicable motor
A1.82	IPM Motor Id Index 3	d-axis current when max. torque x 3/10 in IPM motor index table	A	0～6553.5	0	×	Synchronous/ asynchronous
A1.83	IPM Motor Id Index 4	d-axis current when max. torque x 4/10 in IPM motor index table	A	0～6553.5	0	×	Synchronous/ asynchronous
A1.84	IPM Motor Id Index 5	d-axis current when max. torque x 5/10 in IPM motor index table	A	0～6553.5	0	×	Synchronous/ asynchronous
A1.85	IPM Motor Id Index 6	d-axis current when max. torque x 6/10 in IPM motor index table	A	0～6553.5	0	×	Synchronous/ asynchronous
A1.86	IPM Motor Id Index 7	d-axis current when max. torque x 7/10 in IPM motor index table	A	0～6553.5	0	×	Synchronous/ asynchronous
A1.87	IPM Motor Id Index 8	d-axis current when max. torque x 8/10 in IPM motor index table	A	0～6553.5	0	×	Synchronous/ asynchronous
A1.88	IPM Motor Id Index 9	d-axis current when max. torque x 9/10 in IPM motor index table	A	0～6553.5	0	×	Synchronous/ asynchronous
A1.89	IPM Motor Id Index 10	d-axis current when max. torque x 10/10 in IPM motor index table	A	0～6553.5	0	×	Synchronous/ asynchronous
A1.90	IPM Motor Iq Index 1	q-axis current when max. torque x 1/10 in IPM motor index table	A	0～6553.5	0	×	Synchronous/ asynchronous
A1.91	IPM Motor Iq Index 2	q-axis current when max. torque x 2/10 in IPM motor index table	A	0～6553.5	0	×	Synchronous/ asynchronous
A1.92	IPM Motor Iq Index 3	q-axis current when max. torque x 3/10 in IPM motor index table	A	0～6553.5	0	×	Synchronous/ asynchronous
A1.93	IPM Motor Iq Index 4	q-axis current when max. torque x 4/10 in IPM motor index table	A	0～6553.5	0	×	Synchronous/ asynchronous
A1.94	IPM Motor Iq Index 5	q-axis current when max. torque x 5/10 in IPM motor index table	A	0～6553.5	0	×	Synchronous/ asynchronous
A1.95	IPM Motor Iq Index 6	q-axis current when max. torque x 6/10 in IPM motor index table	A	0～6553.5	0	×	Synchronous/ asynchronous
A1.96	IPM Motor Iq Index 7	q-axis current when max. torque x 7/10 in IPM motor index table	A	0～6553.5	0	×	Synchronous/ asynchronous
A1.97	IPM Motor Iq Index 8	q-axis current when max. torque x 8/10 in IPM motor index table	A	0～6553.5	0	×	Synchronous/ asynchronous
A1.98	IPM Motor Iq Index 9	q-axis current when max. torque x 9/10 in IPM motor index table	A	0～6553.5	0	×	Synchronous/ asynchronous
A1.99	IPM Motor Iq Index 10	q-axis current when max. torque x 10/10 in IPM motor index table	A	0～6553.5	0	×	Synchronous/ asynchronous

A2 User Parameter Set

Function code	Name	Description	Unit	Parameter range	Default settings	Change	Applicable motor
A2.00	Control mode selection	0: Terminal operation mode 1: Panel operation mode 2: Fieldbus mode 3: Multi-function terminal	—	0～3	0	×	Synchronous/ asynchronous
A2.01	Analog polarity selection	0: Bipolar (-10 to +10V) 1: Unipolar (0 to 10V)	—	0，1	1	×	Synchronous/ asynchronous
A2.02	Reserved	—	—	—	—	—	—
A2.03	Directed stop selection	0: Directed stop of motor encoder 1: Directed stop of external spindle encoder 2: Directed stop of external proximity switch	—	0～2	0	×	Synchronous/ asynchronous
A2.04	Reserved	—	—	—	—	—	—
A2.05	Joint control mode selection for pulse position	0: Enter pulse position mode directly when I4 is turned on. 1: it executes directed stop first when I4 is turned on, and then enters the pulse position mode after the directed stop ends and outputs the joint control completion signal of pulse position (the completion signal can be set from A2.20 to A2.29).	—	0，1	0	×	Synchronous/ asynchronous
A2.06	Modbus communication enable state settings	Communication address D4006 is set as follows: 0: Stop 1: CW 2: CCW	—	0～2	0	○	Synchronous/ asynchronous
A2.07	CAN communication function selection	0: CAN communication off 1: CAN communication torque synchronization 2: CAN communication speed synchronization	—	0～2	0	○	Synchronous/ asynchronous
A2.08	I1, I2, and I4 speed source selection	0: Analog or pulse velocity source 1: Modbus communication defined by A3.12	—	0，1	0	○	Synchronous/ asynchronous
A2.09	Reserved	—	—	—	—	—	—
A2.10							
A2.11	ST deceleration mode selection	When A2.12 = 1, set to undo the ST's shutdown mode 0: Decelerated shutdown 1: Free shutdown	—	0，1	0	×	Synchronous/ asynchronous
A2.12	ST function selection	0: ST terminal inactive 1: IO terminal, Modbus communication and Can communication control enabled	—	0，1	0	×	Synchronous/ asynchronous

Function code	Name	Description	Unit	Parameter range	Default settings	Change	Applicable motor
A2.13	Directed stop mode selection	0: Directed stop according to current speed. (Available when A2.03=0 or 1) 1: Directed stop set by parameter A2.14. (available when A2.03=0~2; A2.13=1 is mandatory by default when A2.03=2) 2: Proximity directed stop based on the single-turn absolute position. (available when A2.03=0 or 1)	—	0～2	0	×	Synchronous/ asynchronous
A2.14	Directed stop direction selection	0: Forward directed stop 1: Reverse directed stop	—	0，1	0	×	Synchronous/ asynchronous
A2.15	I1 function selection	0: Analog speed control 1: Pulse velocity control	—	0，1	0	×	Synchronous/ asynchronous
A2.16	T2, T3, T4 pulse form selection (set by bit)	Bit0: Pulse input type setup on or off 0: Off 1: On Bit1: Pulse input port T4 type 0: Pulse + direction 1: Orthogonal pulse Bit2: Pulse input port T3 type 0: Pulse + direction 1: Quadrature pulse Bit3: Pulse input port T2 type 0: Pulse + direction 1: Quadrature pulse	—	0～15	15	×	Synchronous/ asynchronous
A2.17	Pulse input port selection	0: T4 port 1: T2 port 2: T3 port	—	0～2	0	×	Synchronous/ asynchronous
A2.18	Pulse position feedback source selection	0: First code disk T5 motor encoder 1: Second code disk T4 spindle encoder	—	0，1	0	×	Synchronous/ asynchronous
A2.19	I4 function selection	0: Analog rigid tapping 1: Pulse rigid tapping	—	0，1	0	×	Synchronous/ asynchronous
A2.20	Q1 function selection	0: No output 1: Torque alarm output 2: Servo enable 3: Driver ready to go 4: Speed a reached 5: Motor zero speed 6: Directed stop completed 7: Pulse position joint control completed 8: Encoder IO self-learning completed 9: Driver fault output 100: Spindle unclamp in place 101: Spindle clamp in place 102: No tool in spindle	—	0～102	3	×	Synchronous/ asynchronous
A2.21	Q2 function selection				4	×	Synchronous/ asynchronous
A2.22	M0A function selection				6	×	Synchronous/ asynchronous
A2.23	M1A function selection				9	×	Synchronous/ asynchronous
A2.24	Q3 function selection				2	×	Synchronous/ asynchronous
A2.25	Q4 function selection				5	×	Synchronous/ asynchronous

Function code	Name	Description	Unit	Parameter range	Default settings	Change	Applicable motor
A2.26	DA1 analog output	0: Internal register 1: Current torque command, output proportional to max torque 2: Current torque feedback, output proportional to max torque 3: Current speed command, output proportional to max speed 4: Current speed feedback, output proportional to max speed 5: Present current feedback, output proportional to max current 21: Absolute value of current torque command 22: Absolute value of current torque feedback 23: Absolute value of current speed command 24: Absolute value of current speed feedback	—	0～24	0	×	Synchronous/ asynchronous
A2.27	DA2 analog output						
A2.28	Q5 function selection	Parameters same as A2.20 to A2.25 are optional.	—	0～102	0	×	Synchronous/ asynchronous
A2.29	Q6 function selection						
A2.30	I5 function selection	0: Inactive 1: Torque control 2: Low-speed function 3: Zero speed shaft locking 4: External fault input (normally closed) 5: Proximity switch directed stop 6: Jog forward 7: Second directed stop	—	0～7	0	×	Synchronous/ asynchronous
A2.31	I6 function selection	0: Swing 1: Jog reversal Others: Inactive	—	0，1	0	×	—
A2.32	I10 function selection	0: Inactive 1: Enable IO self-learning function of synchronous motor encoder: When I10 is active for self-learning and output self-learning completion signal. 2: Qinglong dedicated function for torque control: When I10 is active, the torque output current Cn.10 can be adjusted in real time by FV according to A3.02 threshold ratio or by setting A3.03 value through 485 communication (A2.39 setting torque source).	—	0～2	0	×	Synchronous
A2.33	T2 port pulse count direction selection	0: Incremental count 1: Decremental count	—	0，1	0	×	Synchronous/ asynchronous
A2.34	T3 port pulse count direction selection	0: Incremental count 1: Decremental count	—	0，1	0	×	Synchronous/ asynchronous
A2.35	T4 port pulse count direction selection	0: Incremental count 1: Decremental count	—	0，1	0	×	Synchronous/ asynchronous
A2.36	Reserved	—	—	—	—	—	—

Function code	Name	Description	Unit	Parameter range	Default settings	Change	Applicable motor
A2.37	T4 port pulse output direction selection	0: A advances B 1: B advances A	—	0，1	0	×	Synchronous/ asynchronous
A2.38	T4 port pulse output Z-phase width selection	0：1/4T 1：1/2T 2：1T	—	0～2	2	×	Synchronous/ asynchronous
A2.39	I5 torque control source selection	Set three torque control source selections for Can communication torque synchronization control (A2.07=1), I5 torque control (A2.30=1), and I10 Qinglong dedicated function for torque control (A2.32=2): 0: FV potentiometer and set A3.02 (available for I5 and I10 torque control) 1: Modbus communication and set A3.03 (available for I5 and I10 torque control) 2: Pulse torque synchronization and set host Fn.66=1 (available for I5 torque control) 3: CAN communication host real-time feedback torque (available for Can communication torque synchronization control)	—	0～3	0	×	Synchronous/ asynchronous
A2.40 ～ A2.95	Reserved	—	—	—	—	—	—
A2.96	PLC flag for first run	123: PLC has run for the first time and finished IO port configuration. Others: PLC has never run with IO ports not configured, and all IO ports are initialized after reboot.	—	0～123	123	×	Synchronous/ asynchronous
A2.97	Industry version number	838: Standard spindle for new structure	—	838	838	∗	Synchronous/ asynchronous
A2.98	A2A3 version number	A2A3 version number, updated in synchronization with the program	—	0～32767	13	∗	Synchronous/ asynchronous
A2.99	Internal PLC version number	Internal PLC version number, updated in synchronization with the program	—	0～32767	13	∗	Synchronous/ asynchronous

A3 User Parameter Set

Function code	Name	Description	Unit	Parameter range	Default settings	Change	Applicable motor
A3.00	Motor encoder direction	0: positive count 1: reverse count	—	0，1	0	×	Synchronous/ asynchronous
A3.01	Motor running direction	0: CCW forward 1: CW forward	—	0，1	0	×	Synchronous/ asynchronous
A3.02	Maximum torque for FV 10V at I5 torque control	When I5 or I10 is set as the potentiometer torque control, the max. torque value corresponds to an FV input of 10V.	0.1N·m	0～32767	10	○	Synchronous/ asynchronous
A3.03	Modbus torque setting for I5 torque control	Set I5 or I10 as the torque value for Modbus communication torque control with communication address D4103	0.1N·m	-32767 ～32767	0	○	Synchronous/ asynchronous
A3.04	Torque threshold output	The torque alarm point is output when the actual torque is greater than the set value, which can be set via A2.20 to A2.29.	0.1N·m	0～32767	50	○	Synchronous/ asynchronous
A3.05	Max. speed for 10V at I5 low-speed control	Max. motor speed at 10V analog voltage input when I5 is set as the low speed.	rpm	0～60000	500	○	Synchronous/ asynchronous
A3.06	Number of motor encoder lines	Set the number of motor encoder lines for T5 port	Pulse/r	0～10000	1024	×	Synchronous/ asynchronous
A3.07	Number of spindle encoder lines	Set the number of motor encoder lines for T4 port	Pulse/r	100～16384	1024	×	Synchronous/ asynchronous
A3.08	Disable zero-speed shaft-locking time	Set the zero-speed shaft-locking time after removing the running I/O.	ms	0～20000	100	○	Synchronous/ asynchronous
A3.09	Primary deceleration time	Set the deceleration time after removing the running I/O.	0.01s	0～20000	80	○	Synchronous/ asynchronous
A3.10	Emergency stop deceleration time for I5 external fault input	Set the motor emergency stop deceleration time with I5 as an external fault input	0.01s	0～20000	60	○	Synchronous/ asynchronous
A3.11	Voltage offset for I5 torque control FV of 0V	Set U2.09 voltage offset value for 0V of FV input with I5 torque control. Ensure that the Fn64 torque output percentage is also 0 when the FV input is 0V. Calculation: When there is no FV input, A3.11 = U2.09 × 100	0.01V	-1000～1000	0	○	Synchronous/ asynchronous
A3.12	Modbus communication control speed settings	Set motor speed communication address D4112 with Modbus communication control	rpm	0～32767	0	○	Synchronous/ asynchronous

Function code	Name	Description	Unit	Parameter range	Default settings	Change	Applicable motor
A3.13	Second set of parameter switching thresholds for speed loop	Set speed threshold value when second set of PI parameters is active. The second set of parameters is used when the output speed is less than this set speed value, and the second set of PI parameters is not enabled when this value is 0.	rpm	0～6000	0	○	Synchronous/ asynchronous
A3.14	Second proportional gain of speed loop	Set the second proportional gain of the speed loop (Kp2)	—	0～65535	300	○	Synchronous/ asynchronous
A3.15	Second integral time constant of the speed loop	Set second integral time constant of the speed loop (Ti2)	—	0～65535	20	○	Synchronous/ asynchronous
A3.16 ～ A3.22	Reserved	—	—	—	—	—	—
A3.23	Max. speed for analog speed control of 10V	Set max. motor speed for analog voltage input of 10V with analog speed control	rpm	0～60000	6000	○	Synchronous/ asynchronous
A3.24	Speed control acceleration time	Set speed loop acceleration time with speed control	0.01s	0～20000	80	○	Synchronous/ asynchronous
A3.25	Speed control deceleration time	Set speed loop deceleration time with speed control					
A3.26	Reserved	—	—	—	—	—	—
A3.27	Speed loop proportional gain for speed control	Set the speed loop proportional gain Kp, the larger the value, the higher the gain and the greater the rigidity. Try to set a larger value under the condition that the system does not produce oscillation.	—	0～65535	300	○	Synchronous/ asynchronous
A3.28	Speed loop integral time for speed control	Set the speed loop's speed integral time constant Ti. The smaller the value, the greater the rigidity.	—	0～65535	40	○	Synchronous/ asynchronous
A3.29	Reserved	—	—	—	—	—	—
A3.30	Max speed limit for rigid tapping	Set max. motor speed with analog rigid tapping	rpm	0～60000	1500	○	Synchronous/ asynchronous
A3.31	Rigid tapping acceleration time	Set speed loop acceleration time with analog rigid tapping	0.01s	0～20000	80	○	Synchronous/ asynchronous
A3.32	Rigid tapping deceleration time	Set speed loop deceleration time with analog rigid tapping	0.01s	0～20000	80	○	Synchronous/ asynchronous
A3.33	Proportional gain for rigid tapping speed loop	Set the proportional gain Kp of the speed loop for analog/pulse rigid tapping. The larger the value, the higher the gain and the greater the rigidity. Try to set a larger value under the condition that the system does not produce oscillation.	—	0～65535	300	○	Synchronous/ asynchronous

Function code	Name	Description	Unit	Parameter range	Default settings	Change	Applicable motor
A3.34	Integral time of rigid tapping speed loop	Set the speed loop speed integral time constant Ti for analog/pulse rigid tapping. The smaller the value, the greater the rigidity.	—	0～65535	30	○	Synchronous/ asynchronous
A3.35	Proportional gain for rigid tapping position loop	Set the proportional gain of the position loop during pulse rigid tapping Kp. The larger the value, the faster the response to position commands and the greater the rigidity, while excessive values tend to cause vibration. The smaller the value, the slower the response and the larger the following error.	—	0～65535	200	○	Synchronous/ asynchronous
A3.36	Rigid tapping position loop feedforward	Setting the position loop speed feedforward Kw for pulse rigid tapping	—	0～65535	0	○	Synchronous/ asynchronous
A3.37	Reserved	—	—	—	—	—	—
A3.38 A3.39	First directed stop position	Set the number of pulses for the first directed stop position (32-bit unsigned number)	Pulse	0-4294967295	0	○	Synchronous/ asynchronous
A3.40	Directed stop speed	Set the max. speed for seeking encoder Z-phase pulses or proximity switch signals during directed stop	rpm	0～30000	300	○	Synchronous/ asynchronous
A3.41	Reserved	—	—	—	—	—	—
A3.42	Directed stop acceleration time	Set the speed loop acceleration time for directed stop positioning	0.01s	0～20000	80	○	Synchronous/ asynchronous
A3.43	Directed stop deceleration time	Set the speed loop deceleration time for directed stop positioning	0.01s	0～20000	80	○	Synchronous/ asynchronous
A3.44	Proportional gain of directed stop speed loop	Set the speed loop proportional gain Kp at directed stop. The larger the value, the higher the gain and the higher the rigidity.	—	0～65535	300	○	Synchronous/ asynchronous
A3.45	Directed stop speed loop integral time	Set the speed loop speed integral time constant Ti at directed stop. The smaller the value, the faster the integral speed and the greater the rigidity.	—	0～65535	40	○	Synchronous/ asynchronous
A3.46	First gain of directed stop positioning	Set the proportional gain of first position loop of directed stop	—	0～60000	800	○	Synchronous/ asynchronous
A3.47	Second gain of directed stop positioning	Set the proportional gain of second position loop at directed stop. The value should generally be less than the first gain at directed stop.	—	0～60000	300	○	Synchronous/ asynchronous
A3.48	Switching threshold for directed stop gain	First gain and second gain switching threshold for directed stop positioning. Switching the second positioning gain when the remaining distance is less than this set value, otherwise the first positioning gain is used.	0.01R	0～10	1	○	Synchronous/ asynchronous

Function code	Name	Description	Unit	Parameter range	Default settings	Change	Applicable motor
A3.49 A3.50	Second directed stop position	Set the number of pulses for the second directed stop position (32-bit unsigned number)	Pulse	0-4294967295	1000	○	Synchronous/ asynchronous
A3.51	Upper limit of swing speed	Set the upper limit of swing speed	rpm	0～60000	100	○	Synchronous/ asynchronous
A3.52	Forward swing range	Set the forward swing range	deg	0～36000	6000	○	Synchronous/ asynchronous
A3.53	Reverse swing range	Set the reverse swing range	deg	0～36000	6000	○	Synchronous/ asynchronous
A3.54	Swing acceleration	Set the speed loop acceleration time at swing	0.01s	0～30000	80	○	Synchronous/ asynchronous
A3.55	Swing deceleration	Set the speed loop deceleration time at swing	0.01s	0～30000	80	○	Synchronous/ asynchronous
A3.56	Swinging current	Set the max. torque current for swing output and set the percentage of rated motor current to Dn.01 x A3.56/100.	%	0～1000	50	○	Synchronous/ asynchronous
A3.57	First gain of swing	Set the proportional gain of first position loop of the swing	—	0～60000	300	○	Synchronous/ asynchronous
A3.58	Second gain of swing	Set the proportional gain of second position loop of the swing. This value should generally be less than the first positioning gain.	—	0～60000	100	○	Synchronous/ asynchronous
A3.59	Switching threshold for swing gain	Switching threshold for first and second gains of swing positioning. The second positioning gain is switched when the remaining distance is less than this set value, otherwise the first positioning gain is used.	0.01R	0～10	5	○	Synchronous/ asynchronous
A3.60 ～ A3.62	Reserved	—	—	—	—	—	—
A3.63	Jog forward speed	Set jog forward speed	rpm	0～20000	200	○	Synchronous/ asynchronous
A3.64	Jog reversal speed	Set jog reversal speed	rpm	0～20000	200	○	Synchronous/ asynchronous
A3.65	Jog acceleration time	Set the speed loop acceleration time at jogging	0.01s	0～20000	80	○	Synchronous/ asynchronous
A3.66	Jog deceleration time	Set the speed loop deceleration time at jogging	0.01s	0～20000	80	○	Synchronous/ asynchronous
A3.67	Unclamp and clamp state monitoring	Real-time monitoring value of spindle unclamp and clamp analog sensor	—	0～4095	只读	*	Synchronous/ asynchronous
A3.68	Lower limit of unclamp detection	Lower analog limit for preset spindle unclamp detection	—	0～4095	100	○	Synchronous/ asynchronous
A3.69	Upper limit of unclamp detection	Upper analog limit for preset spindle unclamp detection	—	0～4095	100	○	Synchronous/ asynchronous

Function code	Name	Description	Unit	Parameter range	Default settings	Change	Applicable motor
A3.70	Lower limit of clamp detection	Lower analog limit for preset spindle clamp detection	—	0～4095	100	○	Synchronous/ asynchronous
A3.71	Upper limit of clamp detection	Upper analog limit for preset spindle clamp detection	—	0～4095	100	○	Synchronous/ asynchronous
A3.72	Lower limit of tool-free detection	Lower analog limit for preset spindle tool-free detection	—	0～4095	100	○	Synchronous/ asynchronous
A3.73	Upper limit of tool-free detection	Upper analog limit for preset spindle tool-free detection	—	0～4095	100	○	Synchronous/ asynchronous
A3.74	Communication state monitoring for CAN torque synchronization control	Master and slave stack communication state monitoring during CAN torque communication 1. Master stack monitors the state of No.1 slave stack from Bit1: 0 indicates normal communication, 1 indicates abnormal communication. 2. Judgment by communication timeout time for slave stack: it indicates an error if the value exceeds 2 times the communication period BN.33.	—	0～200	只读	＊	Synchronous/ asynchronous
A3.75	Proportional gain of speed loop for torque control	Set the speed loop proportional gain Kp for I5 torque control or CAN torque synchronization control. The larger the value, the higher the gain and the greater the rigidity.	—	0～32767	500	○	Synchronous/ asynchronous
A3.76	Speed loop integral time for torque control	Set the speed loop integral time constant Ti for I5 torque control or CAN torque synchronization control. The smaller the value, the greater the rigidity.	—	0～32767	40	○	Synchronous/ asynchronous
A3.77	Torque control acceleration time	Target torque acceleration time in torque mode, i.e. time to accelerate from 0% to 100% of rated torque.	s	0～30.00	0.01	○	Synchronous/ asynchronous
A3.78	Torque control deceleration time	Target torque deceleration time in torque mode, i.e. deceleration time from 100% to 0% of rated torque	s	0～30.00	0.01	○	Synchronous/ asynchronous
A3.79	Effective point of torque control function	Set the start value (must be positive) for the slave torque to enter the function operation interval during CAN torque synchronization.	—	0～1000	200	×	Synchronous/ asynchronous
A3.80	Failure point of torque control function	Set the end value of the slave torque exit function operation interval for CAN torque synchronization (must be positive)	—	0～1000	600	×	Synchronous/ asynchronous
A3.81	Scale factor k of torque control function	The function derived from the A3.79 and A3.80 set values, and the inverse of output slope of the slave torque: Scale factor k value in N slave = kxN master/1000-b (the factor k is scaled up by 1000 times by default)	—	1000～32767	1500	×	Synchronous/ asynchronous

Function code	Name	Description	Unit	Parameter range	Default settings	Change	Applicable motor
A3.82	Torque control function constant b	The function derived from the A3.79 and A3.89 set values, and the inverse of output slope of the slave torque: The constant b value in N slave = kxN master/1000-b (The k and b values of the function can be derived by bringing N master = A3.79, N slave = 0 and N master = A3.80, N slave = A3.80 into the function; both values are positive)	—	0～32767	300	×	Synchronous/ asynchronous
A3.83 ～ A3.95	Reserved	—	—	—	—	—	—
A3.96 A3.97	T4 encoder absolute position	Current absolute position pulse count value of the second encoder (32-bit unsigned number)	Pulse	0～4294967295	0	＊	Synchronous/ asynchronous
A3.98 A3.99	T5 encoder absolute position	Current absolute position pulse count value of motor encoder (32-bit unsigned number)	Pulse	0～4294967295	0	＊	Synchronous/ asynchronous

Bn Bus Parameter Set

Function code	Name	Description	Unit	Parameter range	Default settings	Change	Applicable motor
Bn.00	modbus station number	Modbus slave station number setting	—	1～255	1	△	Synchronous/ asynchronous
Bn.01	Baud rate of modbus communication	0：9600 1：19200 2：38400 3：57600 4：115200 5：500k 6: 1200k 7: 2500k	bps	0～7	1	△	Synchronous/ asynchronous
Bn.02	modbus parity check	0: no check 1: even parity 2: Odd parity	—	0～2	0	△	Synchronous/ asynchronous
Bn.03	modbus high and low byte selection	0: low first 1: high first	—	0，1	0	△	Synchronous/ asynchronous
Bn.04	External 485 additional functions	Position: Expansion Module Type: 0: Standard Modbus devices; 1: FV analog module; 2: CTB485 Bus Communication - Master 3: CTB485 Bus Communication - From 4: ESA-01-AO 5: ESA-01-AIO 6: Integral synchronization, uncalibrated PWM counter mode 7: Integral synchronization, calibration PWM counter mode	—	0～7	0	△	Synchronous/ asynchronous
Bn.05	Modbus-TCP IP address	Modbus-TCP IP address setting, 192.168. a.b, Bn.05 as a x 256 + b	—	0～65535	512	△	Synchronous/ asynchronous
Bn.06	High-speed fieldbus selection	0: EtherCAT 1: Profinet 2: Powerlink 3: Ethernet-IP 4: Mechatrolink II 5: Mechatrolink III 6: Profibus	—	0～6	0	△	Synchronous/ asynchronous
Bn.07	Profinet MAC address	Profinet MAC address settings	—	1～255	1	△	Synchronous/ asynchronous
Bn.08	Reserved	—	—	—	—	—	—
Bn.09	Reserved	—	—	—	—	—	—
Bn.10	Mechatrolink II station number	Mechatrolink II slave station number settings	—	0～255	4	△	Synchronous/ asynchronous
Bn.11	Mechatrolink III station number	Mechatrolink III slave station number settings	—	0～255	4	△	Synchronous/ asynchronous
Bn.12	Syntec system servo axis forms	0: Rotary axis 1: Linear axis	—	0，1	0	△	Synchronous/ asynchronous
Bn.13	Bus interpolation cycle settings	Bus cycle time	ms	0～65535	3	×	Synchronous/ asynchronous

Function code	Name	Description	Unit	Parameter range	Default settings	Change	Applicable motor
Bn.14	Bus domain time parameter settings	Disconnection is considered when the bus communication is disconnected for longer than this preset.	ms	0～65535	200	×	Synchronous/ asynchronous
Bn.15	Bus interrupt cycle	Bus interrupt cycle (automatically obtained from the bus)	us	0～65535	1	✳	Synchronous/ asynchronous
Bn.16	Numerator L for bus speed gear ratio	Numerator of bus speed command gear ratio	—	1～4294967296	1	○	Synchronous/ asynchronous
Bn.17	Numerator H for bus speed gear ratios						
Bn.18	Denominator L for bus speed gear ratio	Denominator of bus speed command gear ratio	—	1～4294967296	1	○	Synchronous/ asynchronous
Bn.19	Denominator H for bus speed gear ratios						
Bn.20	Mechatrolink bus host station selection	0: Syntec CNC system 1: LNC CNC system 2: KND CNC system 3: LYNUC CNC system 4: Lantian CNC system 5: HUST CNC system 6: Keyence controller 7: Syntec CNC system 6 8: Yaksawa controller 9: Higerman CNC	—	0～9	0	△	Synchronous/ asynchronous
Bn.21	EtherCAT bus host station selection	0: Beifu Controller 1: I5 CNC system 2: ZTE Xitian Controller 3: CIA402 protocol	—	0～3	0	△	Synchronous/ asynchronous
Bn.22	Reserved	—	—	—	—	—	—
Bn.23	CIA402 zero return mode	CIA402 zero return settings	—	0～35	0	○	Synchronous/ asynchronous
Bn.24	CIA402 zero return offset	CIA402 zero return offset settings	deg	0～36000	0	○	Synchronous/ asynchronous
Bn.25	CIA402 directed stop offset	CIA402 directed stop offset settings	deg	0～3600	0	○	Synchronous/ asynchronous
Bn.26	CIA402 speed resolution	0: rpm 1: 0.01rpm 2: 0.0001rpm	—	0～2	0	○	Synchronous/ asynchronous
Bn.27	M3 bus directed stop offset	Additional turns for directed stop	circle	0～100	0	○	Synchronous/ asynchronous
Bn.28	M3 bus function	Processing by position: Bit0: Bus control with multiple gears Bit1: IO controls multiple gears Bit2: Reserved Bit3: Reserved Bit4: Feedback DA1 output percentage (used to modify the value of the feedback load rate)	-	0～32	0	○	Synchronous/ asynchronous

Function code	Name	Description	Unit	Parameter range	Default settings	Change	Applicable motor
Bn.29	6063 (2nd encoder/ T4 position feedback) and 6069 (2nd encoder/ T4 pulse velocity) feedback sources in CIA402	0: External servo encoder 1: T2 2: T3	—	0～2	0	○	Synchronous/ asynchronous
Bn.30 ～ Bn.36	Reserved	—	—	—	—	—	—
Bn.37	Bus directed stop mode selection	0: Directed stop based on the current direction for Z-pass. 1: I5 switch directed stop in current direction 2: Z-pass forward directed stop 3: Z-pass reversal directed stop 4: I5 switch forward directed stop 5: I5 switch reversal directed stop 6: Proximity directed stop with respect to Z-phase	—	0～6	0	○	Synchronous/ asynchronous
Bn.38	Bus disable mode	0: Free shutdown 1: Trigger emergency stop and power-failure memory	—	0，1	0	○	Synchronous/ asynchronous
Bn.39	Low 16 bits for bus bit control	bit0: servo enable bit1: servo reset bit2: emergency stop bit3: bus connection succeeded bit4: current position clear	—	0～4294967296	0	＊	Synchronous/ asynchronous
Bn.40	High 16 bits for bus bit control						
Bn.41	Control mode	0: Speed control 1: Interpolation position 2: Torque mode 3: Positioning mode 4: Zero return mode 15: Other modes	—	0～15	0	＊	Synchronous/ asynchronous
Bn.42	Low 16 bits for target speed	Target speed defined in accordance with the min. speed unit of servo operation	rpm	-214748.3647 ～ 214748.3647	0	＊	Synchronous/ asynchronous
Bn.43	High 16 bits for target speed						
Bn.44	Low 16 bits for target position	Target position defined; target interpolation position if interpolation mode, target positioning position if positioning mode	pulse	0～4294967296	0	＊	Synchronous/ asynchronous
Bn.45	High 16 bits for target position						
Bn.46	Low 16 bits for zero return offset	It takes effect in the zero return mode as a preset position of zero offset	pulse	0～4294967296	0	＊	Synchronous/ asynchronous
Bn.47	High 16 bits for zero return offset						
Bn.48	First speed of zero return	It takes effect in the zero return mode as the first zero return speed during zero return	rpm	0～65535	0	＊	Synchronous/ asynchronous

Function code	Name	Description	Unit	Parameter range	Default settings	Change	Applicable motor
Bn.49	Second speed of zero return	It takes effect in the zero return mode as the second zero return speed during zero return	rpm	0～65535	0	∗	Synchronous/ asynchronous
Bn.50	Motor reset position L	Encoder reset offset	pulse	0～4294967296	0	∗	Synchronous/ asynchronous
Bn.51	Motor reset position H						
B1.52	Bus interrupt counts	Bus interrupt counts	—	0～65535	0	∗	Synchronous/ asynchronous
Bn.53	Target torque	Set target torque of motor as a percentage of rated torque	%	-500.0～ 500.0	0	○	Synchronous/ asynchronous
Bn.54	Upper speed limit for torque mode	Upper limit of forward speed in torque mode	rpm	0～60000	0	○	Synchronous/ asynchronous
Bn.55	Lower speed limit for torque mode	Upper limit of reverse speed in torque mode	rpm	0～60000	0	○	Synchronous/ asynchronous
B1.56	Bus position mode	0: IP 1: CSP	—	0，1	0	△	Synchronous/ asynchronous
B1.57	Free mapping of PN bus	0: Off 1: On	—	0，1	0	△	Synchronous/ asynchronous
B1.58	I5 system selection	0: Standard GH 1: Large pitch GS1 2: Ordinary GS1	-	0～2	0	○	Synchronous/ asynchronous
Bn.59	Driver state L	Servo state returned to the bus	—	0～4294967296	0	∗	Synchronous/ asynchronous
Bn.60	Driver state H						
Bn.61	Low 16 bits for current speed	Current feedback speed, i.e. the speed after bus gear ratio operation	rpm	-214748.3647 ～ 214748.3647	0	∗	Synchronous/ asynchronous
Bn.62	High 16 bits for current speed						
Bn.63	Motor position L	Actual motor position, either first encoder feedback or second encoder feedback depending on the position feedback source	pulse	0～ 4294967296	0	∗	Synchronous/ asynchronous
Bn.64	Motor position H						
Bn.65	Motor Z-pass count L	Actual motor Z-pass count, either first encoder feedback or second encoder feedback depending on the position feedback source	—	0～4294967296	0	∗	Synchronous/ asynchronous
Bn.66	Motor Z-pass count H						
Bn.67	Motor latching position L	Actual motor latching position, either first encoder feedback or second encoder feedback depending on the position feedback source	pulse	0～4294967296	0	∗	Synchronous/ asynchronous
Bn.68	Motor latching position H						
Bn.69	Motor load factor	Motor load factor, calculated from actual torque feedback	%	0～1000	0	∗	Synchronous/ asynchronous
Bn.70	Enable Profinet bus clock flag	0: disabled 1: enabled	—	0，1	0	○	Synchronous/ asynchronous

Function code	Name	Description	Unit	Parameter range	Default settings	Change	Applicable motor
Bn.71	CIA402 Directed stop offset setting mode	0: Parameter defined 1: Bus defined 2: Multi-directed stop position parameters defined	—	0～2	0	○	Synchronous/ asynchronous
Bn.72	CIA 402 Partial subject selection	Position, current recovery source selection: 0:6077 and 6078 reply to the percentage of torque current and current current 1: 6077 and 6078 reply with output torque and winding current information Ten people, location reply source selection: 0:6064 Reply with 32-bit count value 1: 6064 replies with absolute angle information of 0.01 degrees Hundred positions, selection of contour speed source: 0: Use 6081 as the contour velocity source 1: Use 60FF as the speed source for contour speed mode, zero return mode, and quasi stop mode Thousand bit, PDO data saving options: 0: Do not save 1: Save 10000 positions: 6063 object settings 0:6063 Reply to U2.01's 32-bit count value 1: 6063 reply U2.16 absolute angle information 0.01 degrees	—	0～65535	0	○	Synchronous/ asynchronous
Bn.73	nable Profinet bus torque limit	Processing by position: Bit0: Enable torque limiting function Bit1: Enable speed limiting function Bit2: Invalid speed bus given under synchronous torque	—	0～65535	0	○	Synchronous/ asynchronous
Bn.74	DSC speed feedforward L	DSC speed feedforward display	rpm	-2147483647～ 2147483647	0	＊	Synchronous/ asynchronous
Bn.75	DSC speed feedforward H						
Bn.76	PN bus message type	0:102 message 1: 105/106 message	-	0，1	0	△	Synchronous/ asynchronous
Bn.77	Bus command filter	Currently used only in PN bus mode and with a 200P bus card; it is set to the number of command filters, with 1 time being the bus cycle.	—	0～10	0	○	Synchronous/ asynchronous
Bn.78	Previous motor encoder count value L	Previous motor encoder count value	pulse	0～ 4294967296	0	○	Synchronous/ asynchronous
Bn.79	Previous motor encoder count value H						

Function code	Name	Description	Unit	Parameter range	Default settings	Change	Applicable motor
Bn.80	The manufacturer keeps the parameters	It's useless	—	0～65535	0	×	Synchronous/ asynchronous
Bn.81	In bus mode, the position electronic gear ratio is 16 bits lower (numerator)	In bus mode, the position electronic gear ratio is numerator, and in denominator bus mode	—	0～ 4294967296	0	×	Synchronous/ asynchronous
Bn.82	In bus mode, the position electronic gear ratio is 16 bits higher (numerator)						
Bn.83	In bus mode, the position electronic gear ratio is 16 bits lower (numerator)	the position electronic gear ratio is numerator	—	0～ 4294967296	0	×	Synchronous/ asynchronous
Bn.84	in bus mode, the position electronic gear ratio is 16 bits higher (numerator)						
Bn.85 ～ Bn.91	The manufacturer keeps the parameters	The manufacturer keeps the parameters	—	0～65535	0	×	Synchronous/ asynchronous
Bn.92	The origin position of the absolute value encoder is offset by 16 bits	Can only be used when the main station is KND	—	0～65535	0	○	Synchronous/ asynchronous
Bn.93	The origin position of the absolute value encoder is offset by 16 bits		—	0～65535	0	○	Synchronous/ asynchronous
Bn.94	The grating scale pitch of the external encoder is 16 bits lower	Can only be used when the main station is KND.And this parameter must be non-zero, otherwise the system cannot automatically write it	—	0～65535	0	○	Synchronous/ asynchronous
Bn.95	The grating scale pitch of the external encoder is 16 bits higher		—	0～65535	0	○	Synchronous/ asynchronous
Bn.96	Absolute encoder multi turn limit value	Can only be used when the main station is KND, read-only	—	0～65535	0	○	Synchronous/ asynchronous
Bn.98	Fixed monitoring 1 selection	Can only be used when the main station is Hyde Alliance	—	0～65535	0	○	Synchronous/ asynchronous
Bn.99	Fixed monitoring 12selection		—	0～65535	0	○	Synchronous/ asynchronous

Cn Control Parameter Set

Function code	Name	Description	Unit	Parameter range	Default settings	Change	Applicable motor
Cn.00	Motor running direction selection	0: CCW forward 1: CW forward	—	0，1	0	×	Synchronous/ asynchronous
Cn.01	Acceleration time	Speed mode acceleration time	s	0～200.00	0.8	○	Synchronous/ asynchronous
Cn.02	Deceleration time	Speed mode deceleration time	s	0～200.00	0.8	○	Synchronous/ asynchronous
Cn.03	Acceleration onset S-curve time	Acceleration onset S-curve time settings	s	0～200.00	0	○	Synchronous/ asynchronous
Cn.04	Acceleration end S-curve time	Acceleration end S-curve time settings	s	0～200.00	0	○	Synchronous/ asynchronous
Cn.05	Deceleration onset S-curve time	Deceleration onset S-curve time settings	s	0～200.00	0	○	Synchronous/ asynchronous
Cn.06	Deceleration end S-curve time	Deceleration end S-curve time settings	s	0～200.00	0	○	Synchronous/ asynchronous
Cn.07	Emergency deceleration time	Emergency deceleration time at the emergency stop of external input	s	0～200.00	0.8	○	Synchronous/ asynchronous
Cn.08	Enable off delay time	A delayed shutdown of the module after a deceleration shutdown to prevent slewing	s	0～200.00	0	○	Synchronous/ asynchronous
Cn.09	Shutdown mode selection	0: Decelerated shutdown 1: Free shutdown	—	0，1	1	○	Synchronous/ asynchronous
Cn.10	Load current limits	Max. torque current output = Cn.10 x Dn.01/100	%	0～1000	150	○	Synchronous/ asynchronous
Cn.11	Dynamic braking current limits	0: Disabled Max. torque current for braking output =Cn.11×Dn.01/100	%	0～1000	0	○	Synchronous/ asynchronous
Cn.12	Second set of load current limits	Used when triggering a second set of load current limits; Currently triggered by external DI; Max. torque current output = Cn.12 x Dn.01/100	%	0～1000	0	○	Synchronous/ asynchronous
Cn.13	Minimum deceleration time for quasi-stop	Perform Z-phase positioning with minimal deceleration time to prevent mechanical impact	%	0～1000	0.5	○	Synchronous/ asynchronous
Cn.14	Reserved	—	—	—	—	—	—
Cn.15	Matching motor control parameters	1: Automatic matching of motor control parameters	—	1	0	×	Synchronous/ asynchronous
Cn.16	Scale parameter for motor 1 current loop	Current loop scale parameter Kp settings	—	0～30000	100	○	Synchronous/ asynchronous
Cn.17	Current loop integral time constant for motor 1	Current loop integral time constant Ti settings	—	0～300.00	4.00	○	Synchronous/ asynchronous
Cn.18	Current loop decoupling function for motor 1	0: Turn off current loop decoupling function 1: Turn on current loop decoupling function	—	0～2	0	×	Synchronous/ asynchronous
Cn.19	Proportional gain of motor 1 speed loop	Speed loop proportional gain Kp settings	—	0～65535	300	○	Synchronous/ asynchronous

Function code	Name	Description	Unit	Parameter range	Default settings	Change	Applicable motor
Cn.20	Speed loop integral time constant for motor 1	Speed loop integral time constant Ti settings	—	0～65535	40	○	Synchronous/ asynchronous
Cn.21	Speed loop second proportional gain for motor 1	Speed loop proportional gain Kp settings, active when the output speed is below the set value of Cn.23	—	0～65535	300	○	Synchronous/ asynchronous
Cn.22	Speed loop second integral gain for motor 1	Speed loop integral gain Ti settings, active when the output speed is below the set value of Cn.23	—	0～65535	20	○	Synchronous/ asynchronous
Cn.23	Switching speed of motor 1 speed loop PI parameters	0: Second proportional gain and integral time constant of the speed loop inactive If the set value is not equal to 0 and the output speed is less than the set value, Cn.21 and Cn.22 are active.	rpm	0～6000.0	0	○	Synchronous/ asynchronous
Cn.24	Motor 1 speed torque feedforward factor	Motor 1 speed torque feedforward factor settings	—	0～2000	0	○	Synchronous/ asynchronous
Cn.25	Motor 1 speed torque feedforward filter	Motor 1 speed torque feedforward filter settings	—	0～1000	4	○	Synchronous/ asynchronous
Cn.26	Motor 1q axis current loop Kp	When the motor is an IPM motor and the dq-axis is turned on, the independent PI is active.	—	0～30000	100	○	Synchronous/ asynchronous
Cn.27	Motor 1q axis current loop Ti	When the motor is an IPM motor and the dq-axis is turned on, the independent PI is active.	—	0～300.00	4.00	○	Synchronous/ asynchronous
Cn.28	dq-axis pi independently enabled	It is recommended to enable this function when utilizing an IPM motor due to the difference in dq inductance.	—	0，1	0	○	Synchronous/ asynchronous
Cn.29	Proportional gain of motor 1 position loop	Position loop proportional gain Kp settings	—	0～65535	100	○	Synchronous/ asynchronous
Cn.30	Second proportional gain of motor 1 position loop	Second proportional gain Kp of position loop settings, active when the output speed is lower than the set value of Cn.31	—	0～65535	0	○	Synchronous/ asynchronous
Cn.31	Switching speed for proportional gain of motor 1 position loop	0: Position loop second proportional gain inactive Cn.30 is active if the set value is not equal to 0 and the output speed is less than the set value	rpm	0～6000.0	0	○	Synchronous/ asynchronous
Cn.32	Motor 1 position loop speed feedforward	Position loop speed feedforward settings	%	0～6000.0	0	○	Synchronous/ asynchronous
Cn.33	Smoothing index for motor 1 position loop	0: no smoothing; the higher the value, the better the smoothing, but the more delayed it is	—	0～10000	0	○	Synchronous/ asynchronous
Cn.34	Dead zone for position following mode	Pulse following mode active; when the following error is within this dead zone, the position output speed command is 0	—	0～30000	0	○	Synchronous/ asynchronous

Function code	Name	Description	Unit	Parameter range	Default settings	Change	Applicable motor
Cn.35	Position feedback smoothing factor	Used for the filtering coefficient of the dual position closed-loop function, it is a low-pass filter. When this parameter is 0, the dual position closed-loop function is not turned on. The larger the parameter setting, the worse the rigidity will be.	—	0~10000	0	○	—
Cn.36	Motor 1 position loop speed feedforward filter	Motor 1 position loop speed feedforward filter settings	ms	0～1000	0	○	Synchronous/ asynchronous
Cn.37	Proportional gain for motor 2 current loop	Current loop proportional gain Kp settings	—	0～30000	100	○	Synchronous/ asynchronous
Cn.38	Current loop integral time constant for motor 2	Current loop integral time constant Ti settings	—	0～300.00	4.00	○	Synchronous/ asynchronous
Cn.39	Proportional gain of motor 2 speed loop	Speed loop proportional gain Kp settings	—	0～65535	300	○	Synchronous/ asynchronous
Cn.40	Speed loop integral time constant for motor 2	Speed loop integral time constant Ti settings	—	0～65535	40	○	Synchronous/ asynchronous
Cn.41	Second proportional gain of motor 2 speed loop	Speed loop proportional gain Kp settings, active when output speed falls below set value of Cn.43	—	0～65535	300	○	Synchronous/ asynchronous
Cn.42	Second integral time constant for motor 2 speed loop	Speed integral time constant Ti settings, active when the output speed is lower than the set value of Cn.43	—	0～65535	20	○	Synchronous/ asynchronous
Cn.43	Switching speed of motor 2 speed loop PI parameters	0: Second proportional gain and integral time constant of speed loop inactive If the set value is not equal to 0 and the output speed is less than this set value, Cn.41 and Cn.42 are active	rpm	0～6000.0	0	○	Synchronous/ asynchronous
Cn.44	Gain switching condition	0: None 1: Torque command switch 2: Speed command switch 3: Position error switching 4：Position command switching	—	0～4	0	○	Synchronous/ asynchronous
Cn.45	Gain switching level	When Cn.44 is selected differently, the meaning of this parameter will also change. For details, refer to the document "Gain Switching".	—	0～60000	0	○	Synchronous/ asynchronous
Cn.46	Gain switching range	When Cn.44 is selected differently, the meaning of this parameter will also change. For details, refer to the document "Gain Switching".	—	0～60000	0	○	Synchronous/ asynchronous
Cn.47	Gain switching time	Position gain switching smoothen time to prevent abrupt changes in position gain switching	ms	0～10000	20	○	Synchronous/ asynchronous
Cn.48	Rigidity level selection	Rigidity level selection settings		0～12	0	○	Synchronous/ asynchronous
Cn.49	Dead zone compensation offset	Dead zone compensation offset settings	mV	-32767～32767	0	○	Synchronous/ asynchronous
Cn.50	Dead zone compensation selection	0: Off 1: T compensation algorithm 2: Manual T compensation algorithm 3: V compensation algorithm	—	0～3	0	○	Synchronous/ asynchronous

Function code	Name	Description	Unit	Parameter range	Default settings	Change	Applicable motor
Cn.51	Zero speed switching to position mode selection	0: Inactive 1: Active	—	0，1	0	×	Synchronous/ asynchronous
Cn.52	Filter function of trap filter	0: Off 1: Activate trap filter 1 2: Activate trap filter 2 3: Activate trap filter 3 4: Activate trap filter 4	—	0～4	0	×	Synchronous/ asynchronous
Cn.53	Resonance point detection	Resonance point detection	—	0～10000	0	×	Synchronous/ asynchronous
Cn.54	Max. oscillation frequency detected by the FFT	Max. oscillation frequency detected by the FFT	Hz	0～32767	0	＊	Synchronous/ asynchronous
Cn.55	Sliding friction compensation factor	Sliding friction compensation factor settings	%	0～1000	0	○	Synchronous/ asynchronous
Cn.56	Compensation 0 degree position for sinusoidal characteristics	Compensation 0 degree position settings for sinusoidal characteristics	°	0～360.00	0	×	Synchronous/ asynchronous
Cn.57	Compensation factor for sinusoidal characteristics	Compensation factor settings for sinusoidal characteristics	—	-1024～1024	0	○	Synchronous/ asynchronous
Cn.58	Feedback speed filter time factor	Feedback speed filter time = PWM cycle × Cn.58	—	0～20	0	×	Synchronous/ asynchronous
Cn.59	Back-end low-pass filter factor	Speed loop output low-pass filter factor	—	0～256	60	×	Synchronous/ asynchronous
Cn.60	BEMF identification current/low-speed min. current	Percentage of rated current. It indicates the set operating current when the BEMF coefficient is identified, and the set low-speed min. output current for open-loop vector control.	%	0～100	30	×	Synchronous
Cn.61	Estimated stator resistance coefficient	The speed of online estimation of stator resistance for open-loop vector control, where 0 indicates that no online estimation of resistance is performed.	—	0～200	1	○	Synchronous
Cn.62	SLVC speed estimation gain1	The speed estimation coefficient for open-loop vector control; this parameter is a parameter for debugging and should not be changed by the user.	—	1～1000	20	○	Synchronous
Cn.63	Estimated integral 2 of SLVC speed		—	1～1000	30	○	Synchronous
Cn.64	Estimated integral 1 of SLVC speed		—	0～1000	30	○	Synchronous
Cn.65	SLVC min. carrier	Minimum carrier frequency for synchronized open-loop control	kHz	2～8	2	○	Synchronous
Cn.66	Reserved	—	—	—	—	—	—
Cn.67							

Function code	Name	Description	Unit	Parameter range	Default settings	Change	Applicable motor
Cn.68	Pseudo differential feedforward coefficient	When set to 100%, it is the standard proportional integral control. When it is less than 100%, it is pseudo differential feedforward control, and this value is set too low to slow down the speed loop response strain. When overshoot occurs during operation, this coefficient can be gradually reduced until a more ideal effect is achieved.	%	0～100.0%	100	○	Synchronous/ asynchronous
Cn.69	Current filter factor	Current filter factor settings	—	0～16	0	○	Synchronous/ asynchronous
Cn.70	Self-adjustment of carrier frequency	0: Off 1: On	—	0，1	1	×	Synchronous
Cn.71	Shutdown mode for asynchronous motor	0: Off 1: On	—	0，1	1	×	Asynchronous
Cn.72	Shutdown retention time for asynchronous motor	Prevent the rebound of large asynchronous motors when disabling; the larger this parameter, the better the suppression effect, however, the longer the disabling delay time.	s	0～5	0.5	×	Asynchronous
Cn.73	Reserved	—	—	—	—	—	—
Cn.74	Trap filter 1 resonant frequency	Trap filter 1 resonant frequency settings	—	0～32767	0	×	Synchronous/ asynchronous
Cn.75	Trap filter 1 resonance amplitude	Trap filter 1 resonance amplitude settings	—	-32767～32767	0	×	Synchronous/ asynchronous
Cn.76	Trap filter 2 resonant frequency	Trap filter 2 resonant frequency settings	—	0～32767	0	×	Synchronous/ asynchronous
Cn.77	Trap filter 2 resonance amplitude	Trap filter 2 resonance amplitude settings	—	-32767～32767	0	×	Synchronous/ asynchronous
Cn.78	Trap filter 3 resonant frequency	Trap filter 3 resonant frequency settings	—	0～32767	0	×	Synchronous/ asynchronous
Cn.79	Trap filter 3 resonance amplitude	Trap filter 3 resonance amplitude settings	—	-32767～32767	0	×	Synchronous/ asynchronous
Cn.80	Trap filter 4 resonant frequency	Trap filter 4 resonant frequency settings	—	0～32767	0	×	Synchronous/ asynchronous
Cn.81	Trap filter 4 resonance amplitude	Trap filter 4 resonance amplitude settings	—	-32767～32767	0	×	Synchronous/ asynchronous
Cn.82	Trap filter 5 resonance amplitude	Trap filter 5 resonance amplitude settings	Hz	0～32767	0	×	Synchronous/ asynchronous
Cn.83	Trap filter 5 resonance amplitude	Trap filter 5 resonance amplitude settings	—	-32767～32767	0	×	Synchronous/ asynchronous
Cn.84	Trap filter 6 resonance amplitude	Trap filter 6 resonance amplitude settings	Hz	0～32767	0	×	Synchronous/ asynchronous
Cn.85	Trap filter 6 resonance amplitude	Trap filter 6 resonance amplitude settings	—	-32767～32767	0	×	Synchronous/ asynchronous
Cn.86	Trap filter 7 resonance amplitude	Trap filter 7 resonance amplitude settings	Hz	0～32767	0	×	Synchronous/ asynchronous
Cn.87	Trap filter 7 resonance amplitude	Trap filter 7 resonance amplitude settings	—	-32767～32767	0	×	Synchronous/ asynchronous

Function code	Name	Description	Unit	Parameter range	Default settings	Change	Applicable motor
Cn.88	Trap filter 8 resonance amplitude	Trap filter 8 resonance amplitude settings	Hz	0～32767	0	×	Synchronous/ asynchronous
Cn.89	Trap filter 8 resonance amplitude	Trap filter 8 resonance amplitude settings	—	-32767～32767	0	×	Synchronous/ asynchronous
Cn.90	Ratio of max. output voltage	Ratio settings of max. output voltage	%	60～120	100	×	Synchronous
Cn.91	Voltage closed-loop KP	Voltage closed-loop KP settings	—	30～2000	60	×	Synchronous
Cn.92	Voltage closed-loop TI	Voltage closed-loop Ti settings	—	20～2000	100	×	Synchronous
Cn.93	CNC positioning feedforward factor	CNC positioning feedforward factor	%	0～1000.0	0	○	Synchronous/ asynchronous
Cn.94	CNC curve acceleration time	Time of 1000rpm change during acceleration and deceleration of CNC positioning curve	s	0～300.00	1	○	Synchronous/ asynchronous
Cn.95	CNC curve deceleration time		s	0～300.00	1	○	Synchronous/ asynchronous
Cn.96	S-curve time constant for CNC curve acceleration	S-curve time constant of the acceleration onset of the CNC positioning curve	s	0～300.00	0.5	○	Synchronous/ asynchronous
Cn.97	S-curve time constant for CNC curve deceleration	S-curve time constant for deceleration onset of CNC positioning curve	s	0～300.00	0.5	○	Synchronous/ asynchronous
Cn.98	Reserved	—	—	—	—	—	—
Cn.99							

Dn Motor Parameter Set

Function code	Name	Description	Unit	Parameter range	Default settings	Change	Applicable motor
Dn.00	Motor type selection	0: AC Induction Motor (IM) 1: Surface-mounted AC permanent magnet synchronous motor (SPM) 2: Interior AC permanent magnet synchronous motor (IPM)	—	0～2	0	×	Synchronous/ asynchronous
Dn.01	Rated current of the first motor	First motor rated current settings	A	0～6000.0	11.5	×	Synchronous/ asynchronous
Dn.02	Rated speed of the first motor	First motor rated speed settings	rpm	0～60000	1500	×	Synchronous/ asynchronous
Dn.03	Rated voltage of the first motor	First motor rated voltage settings	V	0～20000	380	×	Synchronous/ asynchronous
Dn.04	Rated power of the first motor	First motor rated power settings	kW	0～6000.0	5.5	×	Synchronous/ asynchronous
Dn.05	Power factor of the first motor	First motor power factor settings	—	0～1.00	0.86	×	Asynchronous
Dn.06	Rated frequency of the first motor	First motor rated frequency settings	Hz	0～6000.0	50.8	×	Synchronous/ asynchronous
Dn.07	Rated torque of the first motor	First motor rated torque settings	N·m	0～60000	35	×	Synchronous/ asynchronous
Dn.08	Number of pole pairs of first motor	First motor pole pair settings	—	0～10000	2	×	Synchronous/ asynchronous
Dn.09	Max. output speed of the first motor	First motor max. output speed settings	rpm	0～60000	8000	×	Synchronous/ asynchronous
Dn.10	EMF factor of the first motor	No-load EMF factor per 1,000 revolutions of the first synchronous motor	V	0～65535	110	×	Synchronous
Dn.11	Motor moment of inertia of the first motor	First motor moment of inertia	$kg \cdot cm^2$	0～60000	0	×	Synchronous/ asynchronous
Dn.12	Reserved	—	—	—	—	—	—
Dn.13	First motor stator resistance	First motor stator resistance settings	Ω	0～65.535	0	×	Synchronous/ asynchronous
Dn.14	First motor rotor resistance	First motor rotor resistance settings	Ω	0～65.535	0	×	Synchronous/ asynchronous
Dn.15	First motor d-axis inductance / stator leakage inductance	Indicates d-axis inductance for synchronous motor Stator leakage inductance for asynchronous motor	mH	0～655.35	0	×	Synchronous/ asynchronous
Dn.16	First motor q-axis inductance / rotor leakage inductance	q-axis inductance for synchronous motor Rotor leakage inductance for asynchronous motor	mH	0～655.35	0	×	Synchronous/ asynchronous
Dn.17	First motor excitation inductance	First motor excitation inductance settings	mH	0～6553.5	0	×	Asynchronous
Dn.18	q-axis current limiting factor for the weak magnetic field of the first motor	Max. value of q-axis current = d-axis current × Dn.18	—	0～100	10	×	Asynchronous
Dn.19	Pre-excitation ratio of the first motor	Action is allowed when the excitation current reaches the preset pre-excitation ratio 0: Pre-excitation off Others: Active	—	0～100	80	×	Asynchronous

Function code	Name	Description	Unit	Parameter range	Default settings	Change	Applicable motor
Dn.20	Minimum excitation current of the first motor	Minimum excitation current settings for the first motor	A	0～300.00	0.01	×	Asynchronous
Dn.21	Constant-power max. speed of the first motor	Constant-power max. speed settings for the first motor	rpm	0～60000	1500	×	Synchronous/ asynchronous
Dn.22	Slip compensation factor of the first motor	Slip compensation factor settings for the first motor	—	0～1000	200	×	Asynchronous
Dn.23	First motor peak torque	Theoretical peak motor torque	N·m	0～65535	40	×	Synchronous/ asynchronous
Dn.24	First motor no-load current	No-load current of the asynchronous motor, active in open-loop mode of the asynchronous motor	A	0～6000.0	0	×	Asynchronous
Dn.25	Rated current of the second motor	Second motor rated current settings	A	0～6000.0	11.5	×	Synchronous/ asynchronous
Dn.26	Rated speed of the second motor	Second motor rated speed settings	rpm	0～60000	1500	×	Synchronous/ asynchronous
Dn.27	Rated voltage of the second motor	Second motor rated voltage settings	V	0～20000	380	×	Synchronous/ asynchronous
Dn.28	Rated power of the second motor	Second motor rated power settings	kW	0～6000.0	5.5	×	Synchronous/ asynchronous
Dn.29	Power factor of the second motor	Second motor power factor settings	—	0～1.00	0.86	×	Asynchronous
Dn.30	Rated frequency of the second motor	Second motor rated frequency settings	Hz	0～6000.0	50.8	×	Synchronous/ asynchronous
Dn.31	Rated torque of the second motor	Second motor rated torque settings	N·m	0～60000	35	×	Synchronous/ asynchronous
Dn.32	Number of pole pairs of second motor	Second motor pole pair settings	—	0～10000	2	×	Synchronous/ asynchronous
Dn.33	Max. output speed of the second motor	Second motor max. output speed settings	rpm	0～60000	8000	×	Synchronous/ asynchronous
Dn.34	EMF factor of the second motor	No-load EMF factor per 1,000 revolutions of the second synchronous motor	V	0～65535	110	×	Synchronous
Dn.35	Motor moment of inertia of the second motor	Second motor moment of inertia	$kg \cdot cm^2$	0～60000	0	×	Synchronous/ asynchronous
Dn.36	Motor load inertia ratio of the second motor	Load inertia ratio to motor rotor inertia of the second motor	—	0～400	0	×	Synchronous/ asynchronous
Dn.37	Second motor stator resistance	Second motor stator resistance settings	Ω	0～65.535	0	×	Synchronous/ asynchronous
Dn.38	Second motor rotor resistance	Second motor rotor resistance settings	Ω	0～65.535	0	×	Synchronous/ asynchronous
Dn.39	Second motor d-axis inductance / stator leakage inductance	Indicates d-axis inductance for synchronous motor Stator leakage inductance for asynchronous motor	mH	0～655.35	0	×	Synchronous/ asynchronous

Function code	Name	Description	Unit	Parameter range	Default settings	Change	Applicable motor
Dn.40	Second motor q-axis inductance / rotor leakage inductance	q-axis inductance for synchronous motor Rotor leakage inductance for asynchronous motor	mH	0～655.35	0	×	Synchronous/ asynchronous
Dn.41	Second motor excitation inductance	Second motor excitation inductance settings	mH	0～6553.5	0	×	Asynchronous
Dn.42	q-axis current limiting factor for the weak magnetic field of the second motor	Max. value of q-axis current = d-axis current × Dn.18	—	0～100	10	×	Asynchronous
Dn.43	Pre-excitation ratio of the second motor	Action is allowed when the excitation current reaches the preset pre-excitation ratio 0: Pre-excitation off Others: Active	ms	0～30000	0	×	Asynchronous
Dn.44	Minimum excitation current of the second motor	Minimum excitation current settings for the second motor	A	0～300.00	0.01	×	Asynchronous
Dn.45	Constant-power max. speed of the second motor	Constant-power max. speed settings for the second motor	rpm	0～60000	1500	×	Synchronous/ asynchronous
Dn.46	Slip compensation factor of the second motor	Slip compensation factor settings for the second motor	—	0～1000	10	×	Asynchronous
Dn.47	Second motor peak torque	Theoretical peak motor torque	N·m	0～65535	40	×	Synchronous/ asynchronous
Dn.48	Max. torque mode for IPM motor	0: MAP mode 1: Automatic mode 2: Off This parameter is set to 0 by default. Select 1 when MAP is unknown or the overload multiplier given by MAP is not enough.	—	0～2	0	×	Synchronous
Dn.49	Motor optimization control mode	0: optimization off 1: optimization on bit0: optimization with current regulator control bit1: overvoltage modulation optimization bit2: optimization of IM-given magnetizing current acquisition (now called magnetic flux linkage setting mode) bit3: Current regulator optimization bit4: Speed regulator optimization	—	0～65535	0	×	Synchronous
Dn.50	IPM weak magnetic factor	The max. weak magnetic current can be controlled with this parameter	—	1～2	1.2	×	Synchronous
Dn.51	SPM weak magnetic function	0: Off 1: On	—	0，1	0	×	Synchronous/ asynchronous

Function code	Name	Description	Unit	Parameter range	Default settings	Change	Applicable motor
Dn.52	Motor identification	0: None 1: Offline identification of motor inertia 2: Static self-learning for synchronous/ asynchronous motor 3: Dynamic self-learning of asynchronous motor 4: Phase current gain identification 5: Static parameter identification of asynchronous motor 2 6: Load inertia ratio identification	—	0～6	0	×	Synchronous/ asynchronous
Dn.53	VF curve type selection	0: Customized VF curve 1: nth power curve	—	0，1	1	×	Asynchronous
Dn.54	nth power curve	nth power curve	—	1.0～3.0	1.0	×	Asynchronous
Dn.55	Min. output frequency	Min. motor output frequency settings	Hz	0～2000.0	0.5	○	Asynchronous
Dn.56	Voltage at min. output frequency	Voltage settings at min. output frequency	V	0～2000.0	5.0	○	Asynchronous
Dn.57	Intermediate output frequency	Intermediate motor output frequency settings	Hz	0～2000.0	25.0	○	Asynchronous
Dn.58	Voltage at intermediate output frequency	Voltage settings at intermediate output frequency	V	0～2000.0	200.0	○	Asynchronous
Dn.59	Rated output frequency	Rated motor output frequency settings	Hz	0～2000.0	50.0	○	Asynchronous
Dn.60	Voltage at rated output frequency	Voltage settings at rated output frequency	V	0～2000.0	400.0	○	Asynchronous
Dn.61	Max. output frequency	Max. motor output frequency settings	Hz	0～2000.0	50.0	○	Asynchronous
Dn.62	Torque compensation	Motor torque compensation settings	%	0～50	0	○	Asynchronous
Dn.63	VF filter factor	VF filter factor	—	26～276	276	×	Asynchronous
Dn.64	VF oscillation suppression methods	0: Suppression by phase method 1: Suppression by voltage method	—	0，1	0	×	Asynchronous
Dn.65 ～ Dn.69	Reserved	—	—	—	—	—	—
Dn.70	SVC/VF pre-excitation time	Active in SVC/VF mode	s	0～5	1	×	Asynchronous
Dn.71	SVC magnetic flux linkage factor	Active in SVC mode to change the target magnetic flux linkage	—	0.5～2	1	×	Asynchronous
Dn.72	Actual SVC encoder speed L	Used in SVC mode to monitor the true speed value of the encoder	rpm	—	0	*	Asynchronous
Dn.73	Actual SVC encoder speed H						
Dn.74	Manual dead zone compensation factor	Active when Cn.50=2 mode to configure the dead zone compensation value	—	0～500	160	×	Asynchronous

Function code	Name	Description	Unit	Parameter range	Default settings	Change	Applicable motor
Dn.75	Synchronous motor iq profile coefficient	When Dn.49.bit6=1, this parameter takes effect; Calculate the coefficient of the outer contour of the iq of the synchronous motor. The larger the coefficient, the greater the maximum value of the output iq current at high speed. However, due to the relationship between the motor and other factors, the actual iq may not reach the target. No limit.	—	0～100	0	×	Asynchronous
Dn.76	Energy saving ratio of asynchronous motor	Used to lower the excitation current as a means of reducing copper losses.	%	40～100	60	×	Asynchronous
Dn.77 ～ Dn.79	Reserved	—	—	—	—	—	—
Dn.80	Load inertia ratio	Total moment of inertia of mechanical load/moment of inertia of motor itself	—	1～300.00	1	○	Asynchronous
Dn.81	Load inertia identification turns	Load inertia identification turns settings	0.1r	0～10.0	0	○	Asynchronous
Dn.82	Load inertia identification speed	Load inertia identification speed settings	rpm	0～8000	0	○	Asynchronous
Dn.83	Reserved	—	—	—	—	—	—
Dn.84	Tooth groove pulsation compensation function	0: No compensation 1: Automatic compensation 2: Manual compensation 5: Offline identification	-	0～5	0	○	Synchronous
Dn.85	Pulsating current (LPF)	Displaying pulsation amplitude	%	-30000～-30000	0	∗	Synchronous
Dn.86	Starting angle of tooth groove pulsation	Manually set the initial angle for pulse suppression	°	0～36000	0	○	Synchronous
Dn.87	Tooth groove pulsation compensation amplitude	Manually set the amplitude of pulse suppression	%	0～10000	0	○	Synchronous
Dn.88	Number of cycles of tooth groove pulsation per revolution	Set the number of pulsations per revolution of motor operation	-	0～500	0	○	Synchronous
Dn.89 ～ Dn.99	Reserved	—	—	—	—	—	—

En Encoder Parameter Set

Function code	Name	Description	Unit	Parameter range	Default settings	Change	Applicable motor
En.00	Motor encoder type (T5)	0: CTB encoder 1: TTL 3: Rotary transformer 4: Sine-cosine encoder 10: Tamagawa 8401 11: Tamagawa 8501 12: Tamagawa N8 13: Tamagawa N9 14: Tamagawa 8413 20: Renishaw RETA30USAxB 31: HEIDENHAIN RCN2310 32: HEIDENHAIN 1325 multi-turn 35: Endata22 Absolute with resolution optional 41: Nikon MAR-HX50AUN11 51: BISSC configurable data bits 70: Yuheng 23-bit	—	0～100	0	△	Synchronous/ asynchronous
En.01	Number of encoder lines (T5)	Encoder wire number settings	Pulse/r	0～65535	2500	△	Synchronous/ asynchronous
En.02	Number of rotary transformer poles (T5)	Number of rotary transformer poles settings	—	1～100	1	△	Synchronous/ asynchronous
En.03	Encoder count direction (T5)	0: forward count 1: reverse count	—	0，1	0	×	Synchronous/ asynchronous
En.04	Number of encoder subdivision bits (T5)	Subdivision digits of sine-cosine encoder	—	0～32	12	△	Synchronous/ asynchronous
En.05	Second encoder / number of pulse lines	Second encoder / number of pulse lines	Pulse/r	100～16384	1024	△	Synchronous/ asynchronous
En.06	Second encoder/pulse direction selection	0: CCW count up 1: CCW count down	—	0，1	0	○	Synchronous/ asynchronous
En.07	Number of motor encoder output divisions	Number of output pulses after frequency division=En.20/2En.07	—	0～1024	0	○	Synchronous/ asynchronous
En.08	Motor encoder output direction	0: A advances B positive 1: B advances A positive	—	0，1	0	○	Synchronous/ asynchronous
En.09	Z-phase width of motor encoder output	0：1/4T 1：1/2T 2：1T 3：5/4T "	-	0～3	0	○	Synchronous/ asynchronous
En.10	Self-learning time for magnetic pole position (T5)	Self-learning time settings for magnetic pole position	s	0～20.0	2.0	×	Synchronous
En.11	Self-learning mode of magnetic pole position (T5)	0: Manual self-learning 1: Auto-learning after driver power-on 2: Auto-learning for first enabling after power-on 3: Static learning of driver power-on 4: Static learning for first enabling	—	0～4	0	×	Synchronous

Function code	Name	Description	Unit	Parameter range	Default settings	Change	Applicable motor
En.12	Manual self-learning command for magnetic pole position (T5)	0: Inactive 1: Positioning learning mode of magnetic pole position 2: Static learning trigger of magnetic pole position 3: Rotary learning trigger of magnetic pole position	—	0～3	0	×	Synchronous
En.13	Low 16 bits self-learning value of the magnetic pole position (T5)	Self-learning value of magnetic pole position	—	0～65535	0	×	Synchronous
En.14	High 16 bits self-learning value of the magnetic pole position (T5)						
En.15	Encoder learning duty cycle	Record the duty cycle information of learning, so that it will be learned quickly as the duty cycle comes out directly when learning next time.	—	0～65535	0	×	Synchronous
En.16	Encoder learning record information	Record the learning information, mainly the rated current and carrier frequency information; if the information matches at the current learning time, then the recorded duty cycle will be used to run.	—	0～65535	0	×	Synchronous
En.17	Z position record for encoder learning	Z is required as a fixed point to record the pole position when learning incremental encoders.	deg	0～360.00	0	×	Synchronous
En.18	Encoder downconversion	Downconversion value of the encoder resolution, with En.20 = theoretical resolution >> En.18	—	0～32	0	×	Synchronous/ asynchronous
En.19	Encoder card selection	0: General smart card 1: MEDx smart card 2: No smart card 10: Parameter-less smart card	—	0～10	0	×	Synchronous/ asynchronous
En.20	Encoder resolution L(T5)	Encoder resolution monitoring	Pulse	0～65535	0	∗	Synchronous/ asynchronous
En.21	Encoder resolution H(T5)						
En.22	Relative angle of single turn (T5)	Relative angle monitoring between current single-turn position and customized zero point	deg	0～360.00	0	∗	Synchronous/ asynchronous
En.23	Relative single-turn pulse position L(T5)	Relative pulse position monitoring between current single-turn position and customized zero point	Pulse	0～65535	0	∗	Synchronous/ asynchronous
En.24	Relative single-turn pulse position H(T5)						
En.25	Customized zero offset value for single turn L(T5)	Offset value settings for single turn customized zero point and encoder zero point	Pulse	0～65535	0	×	Synchronous/ asynchronous
En.26	Customized zero offset value for single turn H(T5)						
En.27	Encoder Z-phase count value (T5)	Encoder Z-phase count value monitoring	—	0～65535	0	∗	Synchronous/ asynchronous

Function code	Name	Description	Unit	Parameter range	Default settings	Change	Applicable motor
En.28	Multi-turn count value for absolute encoder (T5)	Absolute encoder multi-turn count value monitoring for 8401/8501	—	0～65535	0	∗	Synchronous/ asynchronous
En.29	Multi-turn customized zero offset value L(T5)	Offset value settings for multi-turn customized zero point and encoder zero point	Pulse	0～65535	0	×	Synchronous/ asynchronous
En.30	Multi-turn customized zero offset value H(T5)						
En.31	First encoder speed sampling cycle (T5)	First encoder speed sample cycle settings	ms	1～1000	10	○	Synchronous/ asynchronous
En.32	Second encoder speed sampling cycle	Second encoder speed sample cycle settings	ms	1～1000	10	○	Synchronous/ asynchronous
En.33	Second encoder Z-phase count value	Second encoder Z-phase count value monitoring	—	0～65535	0	∗	Synchronous/ asynchronous
En.34	Second encoder Z-phase single-turn latching	Second encoder Z-phase single-turn latching monitoring; the single-turn position latched at Z-pass for single-turn absolute position operation	—	0～65535	0	∗	Synchronous/ asynchronous
En.35	Second encoder resolution L	Second encoder resolution monitoring	Pulse	0～ 4294967295	0	∗	Synchronous/ asynchronous
En.36	Second encoder resolution H						
En.37	External bus encoder type	0: Not used 1: TTL 2: TTL_UVW 3: Rotary transformer 4: sine-cosine encoder 5: 1vpp+distance encoding 10: Tamagawa 8401 11: Tamagawa 8501 12: Tamagawa N8 13: Tamagawa N9 14: Tamagawa 8413 (D18) 20: Renishaw RETA30USAxB 30: HEIDENHAIN RCN2380 31: HEIDENHAIN RCN2310 36: HEIDENHAIN scale 40: Nikon MAR-HX50AHN10 41: Nikon MAR-HX50AUN11 50: Sick Hiperface 51: BISSC(Rotary) 52: BISS-C(Linear) 60: Fagor 70: YUHENG 23 position 75: Yuheng BISS scale 90: Chongqing University of Technology Time Grating 485	—	0～100	0	△	Synchronous/ asynchronous
En.38	Subdivision digits of external bus encoder	Subdivision digits of sine-cosine encoder	—	0～31	0	△	Synchronous/ asynchronous
En.39	Sine-cosine encoder calibration for external bus	0: No operation 1: Start calibration 2: End calibration 3: Automatic calibration	—	0～3	0	△	Synchronous/ asynchronous

Function code	Name	Description	Unit	Parameter range	Default settings	Change	Applicable motor
En.40	Sine-cosine encoder diagnostics for external bus	0: Inactive 1: Start diagnostics 2: Analog and z-pulse diagnostics	—	0～1	0	△	Synchronous/ asynchronous
En.41	Grating scale signal cycle for external distance encoder	See instructions for use of grating scale	um	0～65535	0	△	Synchronous/ asynchronous
En.42	Grating scale reference point distance for external distance encoder	See instructions for use of grating scale	um	0～65535	0	△	Synchronous/ asynchronous
En.43	Grating scale z progressive distance of external distance encoder	See instructions for use of grating scale	um	0～65535	0	△	Synchronous/ asynchronous
En.44	Minimum resolution of external linear grating scale	For calculating the operating speed of a linear grating scale	nm	0～65535	0	△	Synchronous/ asynchronous
En.45	Electrical angle compensation factor	Electrical angle compensation factor	—	0～1.50	0.5	○	Synchronous/ asynchronous
En.46	Magnetic pole learning reversal	0: Disabled 1: reversal enabled	—	0，1	0	×	Synchronous/ asynchronous
En.47	External 485 encoder card selection	0: General smart card 1: MEDx smart card 2: No smart card	—	0～2	0	×	Synchronous/ asynchronous
En.48	Z detection mode of external TTL encoder	0: Detected only once 1: Detected at each Z-pass	—	0，1	0	×	Synchronous/ asynchronous
En.49	Sine-cosine encoder calibration	0: No operation 1: Start calibration 2: End calibration 3: Automatic calibration	—	0～3	0	×	Synchronous/ asynchronous
En.50	Sine-cosine encoder diagnostics	0: Inactive 1: View calibration results 2: vpp signal real-time diagnosis	—	0～2	0	×	Synchronous/ asynchronous
En.51	A-phase amplitude of sine-cosine encoder	A-phase amplitude display for sine-cosine encoder	V	0～3.3	0	∗	Synchronous/ asynchronous
En.52	B-phase amplitude of sine-cosine encoder	B-phase amplitude display for sine-cosine encoder	V	0～3.3	0	∗	Synchronous/ asynchronous
En.53	A-phase zero point of sine-cosine encoder	A-phase zero-point display of sine-cosine encoder	V	0～3.3	0	∗	Synchronous/ asynchronous
En.54	B-phase zero point of sine-cosine encoder	B-phase zero-point display of sine-cosine encoder	V	0～3.3	0	∗	Synchronous/ asynchronous
En.55	Z-pulse counting for sine-cosine encoder	Z-phase raw pulse count value	Pulse	0～255	0	∗	Synchronous/ asynchronous

Function code	Name	Description	Unit	Parameter range	Default settings	Change	Applicable motor
En.56	EA fault codes for sine-cosine encoder	bit0, bit1: 0: A-phase normal 1: Small A-phase amplitude 2: Large A-phase amplitude 3: Small min. A-phase AD value bit2: Large max. A-phase AD value bit3, bit4: 0: B-phase normal 1: Small B-phase amplitude 2: Large B-phase amplitude 3: Small min. B-phase AD value bit5: Large max. B-phase AD value bit6: 2 times large amplitude of AB-phase bit7: One or more errors exist in AB-phase	—	0～255	0	＊	Synchronous/ asynchronous
En.57	A-phase amplitude of external sine-cosine encoder	A-phase amplitude display of external sine-cosine encoder	V	0～3.30	0	＊	Synchronous/ asynchronous
En.58	B-phase amplitude of external sine-cosine encoder	B-phase amplitude display of external sine-cosine encoder	V	0～3.30	0	＊	Synchronous/ asynchronous
En.59	A-phase zero point of external sine-cosine encoder	A-phase zero-point display of external sine-cosine encoder	V	0～3.30	0	＊	Synchronous/ asynchronous
En.60	B-phase zero point of external sine-cosine encoder	B-phase zero-point display of external sine-cosine encoder	V	0～3.30	0	＊	Synchronous/ asynchronous
En.61	Z-pulse counting of external sine-cosine encoder	Z-phase raw pulse count value	Pulse	0～255	0	＊	Synchronous/ asynchronous
En.62	EA fault codes for external sine-cosine encoder	AB-phase analog fault code bit0, bit1: 0: A-phase normal 1: Small A-phase amplitude 2: Large A-phase amplitude 3: Small min. A-phase AD value bit2: 1: Large max. A-phase AD value bit3, bit4: 0: B-phase normal 1: Small B-phase amplitude 2: Large B-phase amplitude 3: Small min. B-phase AD value bit5: Large max. B-phase AD value bit6: 2 times large amplitude of AB-phase bit7: One or more errors exist in AB-phase	—	0～65535	0	＊	Synchronous/ asynchronous
En.63	External smart card version	External smart card version display	—	0～65535	0	＊	Synchronous/ asynchronous
En.64	VPP phase angle compensation enabled	0: Disabled 1: Enabled	—	0，1	0	×	Synchronous/ asynchronous
En.65	VPP signal phase angle	Phase angle of VPP signal sin and cos	°	0.00～180.00	90	＊	Synchronous/ asynchronous
En.66	VPP calibration speed KP	Use the speed loop KP at auto-calibration	—	0～30000	100	×	Synchronous/ asynchronous
En.67	VPP calibration output torque	Use the max. output torque at auto-calibration	%	0～1000	20	×	Synchronous/ asynchronous

Function code	Name	Description	Unit	Parameter range	Default settings	Change	Applicable motor
En.68	VPP calibration speed	Use the speed target at auto-calibration	0.1rpm	0～10000	5	×	Synchronous/ asynchronous
En.69	Reserved	—	—	—	—	—	—
En.70	Encoder reset	0: Inactive 1: Motor encoder 2: Second encoder 3: First pulse input (T2) 4: Second pulse input (T3) 5: Reset single-turn relative position	—	0～5	0	○	Synchronous/ asynchronous
En.71	Low 16 bits of encoder reset set value	Set value for encoder reset	Pulse	0～ 4294967295	0	○	Synchronous/ asynchronous
En.72	High 16 bits of encoder reset set value						
En.73	Pulse output mode	Pulse output mode, can be divided by bit output or input to electronic gear ratio numerator denominator output at will. This parameter configuration description: bit0： 0: Divided by bit output, EN.07 works. 1: Any frequency division output, EN.74, EN.76 work. bit1： 0: TTL encoder without adapter card directly connected to output, unable to divide frequency. 1: TTL encoder without adapter card for frequency division output. Bit2: 0: First encoder data pulse output 1: Second encoder data pulse output	-	0～65535	0	△	Synchronous/ asynchronous
En.74	Numerator L of pulse output reduction ratio	When En.73=1, the numerator and denominator of this reduction ratio works; and it can be used for arbitrary frequency division output of pulse output, which is more flexible. The numerator and denominator of the reduction ratio are 32 bits. Number of pulses output = Encoder resolution x En.74/ En.76	—	0～ 4294967295	0	△	Synchronous/ asynchronous
En.75	Numerator H of pulse output reduction ratio						
En.76	Denominator L of pulse output reduction ratio						
En.77	Denominator H of pulse output reduction ratio						
En.78	Multi-turn customized zero-point offset value L(T4)	Offset value settings for multi-turn customized zero-point and encoder zero-point	Pulse	0～ 4294967295	0	∗	Synchronous/ asynchronous
En.79	Multi-turn customized zero-point offset value H(T4)						
En.80	External 1vpp encoder phase angle compensation enabled	0: Disabled 1: Enabled	—	0，1	0	×	Synchronous/ asynchronous
En.81	SC phase angle of external 1vpp encoder	Phase angle of VPP signal sin and cos	°	0.00～180.00	90	∗	Synchronous/ asynchronous

Function code	Name	Description	Unit	Parameter range	Default settings	Change	Applicable motor
En.82 ～ En.88	Reserved	—	—	—	—	—	—
En.89	Valid z-pass times for external TTL encoder	Valid z-pass times of external TTL encoder, i.e., z is considered valid after certain z-passes; it can mainly solve the problem of non-servo power supply of external encoder; and z-pass may be triggered mistakenly after the external encoder is powered on due to the reason of perturbation, which may lead to inaccuracy of positioning for the first time.	—	0～10	1	○	Synchronous/ asynchronous
En.90	Numerator L of position gear ratio	Electronic gear ratios used in the position closed-loop; this set of gear ratios not only changes the processing of the position command but also the data of position feedback EN.94 Position command = Position source command x En.90/En.92	—	0～ 4294967295	0	○	Synchronous/ asynchronous
En.91	Numerator H of position gear ratio						
En.92	Denominator L of position gear ratio				0	○	Synchronous/ asynchronous
En.93	Denominator H of position gear ratio						
En.94	Current position L after gear	Current position data after En.90 and En.92 gear ratio operation, En.94 = U2.00 x En.92/ En.90	pul	0～ 4294967295	0	○	Synchronous/ asynchronous
En.95	Current position H after gear						
En.96	Static identification of magnetic poles	0: Static identification old 1: Static identification of inductors 2: Static identification NS	—	0～2	0	○	Synchronous/ asynchronous
En.97	Solidify motherboard parameters to smart card	0: no operation 1: Start solidification	—	0，1	0	×	Synchronous/ asynchronous
En.98	The second electromechanical Angle offset	The offset of the electrical Angle used when the synchronous motor switches the second set of parameters. When it switches to the second motor, the electromagnetic Angle will be added with this parameter	°	0～360.00	0	○	Synchronous
En.99	Multiturn absolute encoder offset switch	0: Off 1: On	—	0，1	0	×	Synchronous/ asynchronous

Fn Encoder Parameter Set

Function code	Name	Description	Unit	Parameter range	Default settings	Change	Applicable motor
Fn.00	Positioning mode selection	0: Absolute position 1: Incremental position 2: Relative Z-phase positioning 3: Position synchronization 4: Real-time positioning 5: Single-turn absolute positioning 6: External IO directed stop 7: Swing positioning	—	0～7	3	○	Synchronous/ asynchronous
Fn.01	Low 16 bits of positioning target position	Positioning target position settings	Pulse	0～65535	0	○	Synchronous/ asynchronous
Fn.02	High 16 bits of positioning target position						
Fn.03	First gain in positioning	First gain during positioning	—	0～60000	300	○	Synchronous/ asynchronous
Fn.04	Second gain in positioning	Second gain in positioning	—	0～60000	50	○	Synchronous/ asynchronous
Fn.05	Threshold value for positioning gain switching distance	Threshold value for switching between the first gain and the second gain of the positioning; switching to the second gain of the positioning when the remaining distance is less than this value, otherwise the first gain of the positioning is used	R	0～10.00	0.1	○	Synchronous/ asynchronous
Fn.06	Max. positioning speed	Max. positioning speed settings	rpm	0～30000	300	○	Synchronous/ asynchronous
Fn.07	Min. positioning speed	Min. positioning speed settings	0.0001 rpm	0～60000	1	○	Synchronous/ asynchronous
Fn.08	Positioning curve	0: Linear positioning 1: Square root positioning 2: 1/nth square localization	—	0～2	0	○	Synchronous/ asynchronous
Fn.09	Positioning curve 1/ nth power	This parameter is active only when Fn.08=2; the larger the denominator, the smoother the onset of the curve shutdown, the steeper the end 0: 1/2.0th power positioning 1: 1/2.1th power positioning 2: 1/2.2th power positioning . . . 10: 1/3.0th power positioning	—	0～10	0	○	Synchronous/ asynchronous
Fn.10	Positioning direction	0: CCW 1: CW	—	0，1	0	○	Synchronous/ asynchronous
Fn.11	Rough positioning range	When the residual positioning distance (angle) is less than Fn.11 ÷ Fn.13, it is determined that the rough positioning has been reached, thus outputting rough positioning arrival signal.	deg	0～360.00	15	○	Synchronous/ asynchronous

Function code	Name	Description	Unit	Parameter range	Default settings	Change	Applicable motor
Fn.12	Fine positioning range	When the residual positioning distance (angle) is less than Fn.12 ÷ Fn.13, it is determined that the fine positioning has been reached, thus outputting the fine positioning arrival signal.	deg	0～360.00	1	○	Synchronous/ asynchronous
Fn.13	Positioning resolution	Positioning resolution	-	1～1000	1	○	Synchronous/ asynchronous
Fn.14	Positioning detection window time	When the execution of positioning satisfies the preset Fn.14 time that the positioning arrival range lasts, thus outputting the corresponding positioning arrival signal	ms	0～65535	50	○	Synchronous/ asynchronous
Fn.15	Swing forward range	Swing forward position settings	deg	0～360.00	60.00	○	Synchronous/ asynchronous
Fn.16	Swing reversal range	Swing reversal position settings	deg	0～360.00	60.00	○	Synchronous/ asynchronous
Fn.17	Upper limit of swing speed	Max. swing speed settings	rpm	0～60000	50	○	Synchronous/ asynchronous
Fn.18	Swing acceleration time	Swing acceleration time settings	s	0～300.00	1.00	○	Synchronous/ asynchronous
Fn.19	Swing deceleration time	Swing deceleration time settings	s	0～300.00	1.00	○	Synchronous/ asynchronous
Fn.20	Swinging current	Max. torque current for swing output = Fn.20 x Dn.01/100	%	0～1000	10	○	Synchronous/ asynchronous
Fn.21	Star/delta conversion mode	0: no conversion 1: Auto; convert automatically according to the feedback speed, output multi-function output points, and enable according to the delay time. 2: Manual; convert by multi-function DI points, and enable according to the delay time 3: Automatic; convert automatically according to the feedback speed, output multi-function output points, and feedback the multi-function DI as contactor contact to the Enable 4: Manual; convert by multi-function DI points and feedback multi-function DI as contactor contact to Enable 5: External double I-point conversion (delay detection) 6: External double I-point conversion (contact state detection)	—	0～6	0	×	Asynchronous
Fn.22	Star/ delta conversion speed	Convert to delta connection when the actual speed exceeds this preset value, otherwise star connection shall be used.	rpm	0～30000	3000	×	Asynchronous
Fn.23	Tolerance of star/ delta conversion speed	The dead zone range for star/delta conversion, i.e., delta connection when SPD>(Fn.22+Fn.23), star connection when SPD<(Fn.22-Fn.23), and the previous state in all other cases.	rpm	0～30000	100	×	Asynchronous
Fn.24	Star/delta conversion time	This parameter determines the Switch Enable time	ms	0～3000	1000	×	Asynchronous

Function code	Name	Description	Unit	Parameter range	Default settings	Change	Applicable motor
Fn.25	Delay time for turning on Brake	When detecting the need to turn on Brake, first enable the motor, then delay the preset time, then turn on Brake.	ms	0～20000	0	○	Synchronous/ asynchronous
Fn.26	Delay time for turning off Brake	When it detects the need to turn off Brake, turn off Brake first, keep the Enable state, delay the preset time, and then turn off the Enable.	ms	0～20000	0	○	Synchronous/ asynchronous
Fn.27	Emergency electrical braking time	When an alarm occurs in the driver, short the lower bridge arm of the driver to allow the PM motor to quickly brake to a stop	ms	0～30000	0	×	Synchronous
Fn.28	PID function selection	0: Inactive 1: Active	—	0，1	0	×	Synchronous/ asynchronous
Fn.29	PID setting mode	0: Internal register set 1: FV analog set 2: FI analog set 3: FT analog set	—	0～3	0	×	Synchronous/ asynchronous
Fn.30	PID feedback mode						
Fn.31	PID internal set register	Internal set register, i.e., conduct set operations according to the percentage of relative instructions	%	0～100.0	0	○	Synchronous/ asynchronous
Fn.32	PID internal feedback register	Internal feedback register, i.e., conduct set feedback according to the percentage of relative feedback	%	0～100.0	0	○	Synchronous/ asynchronous
Fn.33	PID set feedback range	The PID set feedback range consists of dimensionless units and is used in the PID set display Fn.52 and the PID feedback display Fn.53.	—	0～65535	0	○	Synchronous/ asynchronous
Fn.34	Direction of PID action	It reverses the polarity of the PID output. This feature, after increasing the target value of the PID, can be used for inverse characteristic loads where the output frequency of the servo is reduced. 0: Forward 1: Reverse	—	0，1	0	×	Synchronous/ asynchronous
Fn.35	PID proportional gain 1	First set of proportional gains Kp for the PID regulator	—	0～20000	10	○	Synchronous/ asynchronous
Fn.36	PID integral time 1	The first set of integral times Ti for the PID regulator	—	0～20000	100	○	Synchronous/ asynchronous
Fn.37	PID differential factor 1	First set of differential factor Kd for PID regulator	—	0～20000	0	○	Synchronous/ asynchronous
Fn.38	PID proportional gain 2	Second set of proportional gains Kp for the PID regulator	—	0～20000	10	○	Synchronous/ asynchronous
Fn.39	PID integral time 2	Second set of integral times Ti for the PID regulator	—	0～20000	100	○	Synchronous/ asynchronous
Fn.40	PID differential factor 2	Second set of differential factor Kd for PID regulator	—	0～20000	0	○	Synchronous/ asynchronous

Function code	Name	Description	Unit	Parameter range	Default settings	Change	Applicable motor
Fn.41	First and second PID switching source selection	0: No switching, with just the first set used 1: Internal register switching 2: Switching via DI terminal 3: Automatic switching via PID output	—	0～3	0	○	Synchronous/ asynchronous
Fn.42	PID internal switching register	0: Use the first set of PIDs 1: Use the second set of PIDs	—	0，1	0	○	Synchronous/ asynchronous
Fn.43	Automatic switching threshold for PID output	When the PID output is greater than this parameter, the first set is switched, otherwise the second set is switched.	%	0～100.0	0	○	Synchronous/ asynchronous
Fn.44	PID output source selection	0: Speed output 1: Torque output 2: Internal register	—	0～2	0	○	Synchronous/ asynchronous
Fn.45	Upper limit of PID output	It limits the max. output of the function PID, which is calculated differently depending on the output source: Fn.44=0: PID output upper limit is Dn.09×Fn45 Fn.44=1: PID output upper limit is the max torque × Fn45	%	0～100.0	0	○	Synchronous/ asynchronous
Fn.46	PID reverse cutoff output	Percentage of reverse limiting output from PID output; it's used in certain situations when reverse rotation and reverse torque are not allowed to occur. Fn.44=0: PID reverse cutoff output is Dn.09 x Fn46 Fn.44 = 1: PID reverse cutoff output is max. torque x Fn46	%	0～100.0	0	○	Synchronous/ asynchronous
Fn.47	PID set acceleration and deceleration time	Acceleration and deceleration times of PID sets can mitigate shocks caused by excessive changes.	s	0～50.00	0	○	Synchronous/ asynchronous
Fn.48	PID feedback filter factor	Low-pass filter for PID feedback, where 0 means no filtering. The larger the value, the greater the filtering effect and the more significant the delay will be	—	0～512	0	○	Synchronous/ asynchronous
Fn.49	PID output filter factor	Low-pass filter for PID output, where 0 means no filtering. The larger the value, the greater the filtering effect and the more significant the delay will be	—	0～512	0	○	Synchronous/ asynchronous
Fn.50	Internal registers for PID register output	The output register address when the PID selects memory register outputs	—	-100.0～100.0	0	○	Synchronous/ asynchronous
Fn.51	Detection window time for PID feedback loss	Window time settings for PID feedback loss detection	—	0～50.00	0	○	Synchronous/ asynchronous
Fn.52	PID set display	Obtained from the set percentage x Fn.33	—	0～65535	0	＊	Synchronous/ asynchronous
Fn.53	PID feedback display	Obtained from the percentage of feedback × Fn.33	—	0～65535	0	＊	Synchronous/ asynchronous

Function code	Name	Description	Unit	Parameter range	Default settings	Change	Applicable motor
Fn.54	PID integration reset	0: Inactive 1: Reset	—	0，1	0	○	Synchronous/ asynchronous
Fn.55	External DI05 positioning count	This parameter indicates the number of times the DI05 signal is triggered when external DI05 is used as the positioning reference source.	—	0～65535	0	＊	Synchronous/ asynchronous
Fn.56	External DI05 positioning latch position L	Data of the position latching when DI05 is triggered when external DI05 is used as a positioning reference source	Pulse	0～ 4294967295	0	＊	Synchronous/ asynchronous
Fn.57	External DI05 positioning latch position H						
Fn.58	External DI05 interrupt polarity	0: Rising edge 1: falling edge	—	0，1	0	○	Synchronous/ asynchronous
Fn.59	Reserved	—	—	—	—	—	—
Fn.60	Positive speed limit in torque mode	Upper limit of positive speed in torque mode	rpm	0～60000	0	○	Synchronous/ asynchronous
Fn.61	Negative speed limit in torque mode	Upper limit of negative speed in torque mode	rpm	0～60000	0	○	Synchronous/ asynchronous
Fn.62	Torque command acceleration time	Target torque acceleration time in torque mode, i.e. the time to accelerate from 0% to 100% of rated torque	s	0～30.00	1.00	○	Synchronous/ asynchronous
Fn.63	Torque command deceleration time	Target torque deceleration time in torque mode, i.e. time for 100% deceleration to 0% of rated torque	s	0～30.00	1.00	○	Synchronous/ asynchronous
Fn.64	Torque target value	Set the target torque of the motor, i.e. the percentage of the rated torque	%	-500.0～500.0	0	○	Synchronous/ asynchronous
Fn.65	Torque output value	Output torque of the motor, i.e. percentage of rated torque	%	-500.0～500.0	0	＊	Synchronous/ asynchronous
Fn.66	Dual-servo fast torque synchronization	Special program for dual torque synchronization 0: Disabled 1: Enable this function and use as host station 2: Enable this function and use as a slave (only active in torque mode)	—	0～2	0	○	Synchronous/ asynchronous
Fn.67	Anti-shake switch for dual-servo torque fast synchronization	Special program for dual torque synchronization 0: Enabled 1: Disabled	—	0，1	0	○	Synchronous/ asynchronous
Fn.68	Reserved	—	—	—	—	—	—
Fn.69	Hopping speed function selection	0: off 1: Enable to one hopping speed 2: Enable two hopping speeds 3: Enable three hopping speeds 4: Enable four hopping speeds	—	0～4	0	○	Synchronous/ asynchronous

Function code	Name	Description	Unit	Parameter range	Default settings	Change	Applicable motor
Fn.70	Speed 1 for hopping speed	Base speed of first hopping speed, with hopping speed range (Fn.70-Fn.71) to (Fn.70+Fn.71). This function is active only when Fn.60>0, otherwise, no hopping speed is performed. If this parameter is 0, the hopping speed is inactive.	rpm	0～32000	0	○	Synchronous/ asynchronous
Fn.71	Width 1 for hopping speed		rpm	0～400	0	○	Synchronous/ asynchronous
Fn.72	Speed 2 for hopping speed	Base speed of first hopping speed, with hopping speed range (Fn.72-Fn.73) to (Fn.72+Fn.73). This function is active only when Fn.60>1, otherwise, no hopping speed is performed. If this parameter is 0, the hopping speed is inactive.	rpm	0～32000	0	○	Synchronous/ asynchronous
Fn.73	Width 2 for hopping speed		rpm	0～400	0	○	Synchronous/ asynchronous
Fn.74	Speed 3 for hopping speed	Base speed of first hopping speed, with hopping speed range (Fn.74-Fn.75) to (Fn.74+Fn.75). This function is active only when Fn.60>2, otherwise, no hopping speed is performed. If this parameter is 0, the hopping speed is inactive.	rpm	0～32000	0	○	Synchronous/ asynchronous
Fn.75	Width 3 for hopping speed		rpm	0～400	0	○	Synchronous/ asynchronous
Fn.76	Speed 4 for hopping speed	Base speed of first hopping speed, with hopping speed range (Fn.76-Fn.77) to (Fn.76+Fn.77). This function is active only when Fn.60>3, otherwise, no hopping speed is performed. If this parameter is 0, the hopping speed is inactive.	rpm	0～32000	0	○	Synchronous/ asynchronous
Fn.77	Width 4 for hopping speed		rpm	0～400	0	○	Synchronous/ asynchronous
Fn.78	Reserved	—	—	—	—	—	—
Fn.79	DA output filter time	Filter the DA output source to prevent the output DA voltage from jittering due to excessive jittering	ms	0～65535	0	○	Synchronous/ asynchronous
Fn.80	DA1 output source selection	0: Internal register 1: Current torque command, output proportional to max. torque 2: Current torque feedback, output proportional to max. torque 3: Current speed command, output proportional to max. speed 4: Current speed feedback, output proportional to max. speed 5: Present current feedback, output proportional to max. output current 6: Torque current 21: Absolute value of current torque command 22: Absolute value of current torque feedback 23: Absolute value of current speed command 24: Absolute value of current speed feedback 26: Absolute value of torque current	—	0～26	0	○	Synchronous/ asynchronous
Fn.81	DA2 output source selection		—	0～26	0	○	Synchronous/ asynchronous

Function code	Name	Description	Unit	Parameter range	Default settings	Change	Applicable motor
Fn.82	DA1 zero offset	DA1 and DA2 output offset settings, i.e., the offset when the setting is 0	%	-100.00～100.00	0	○	Synchronous/ asynchronous
Fn.83	DA2 zero offset						
Fn.84	DA1 output internal register	Digital -100% ~ 0 ~ 100% Analog -10～0～10V Analog 0～5V～10V	%	-100.00～100.00	0	○	Synchronous/ asynchronous
Fn.85	DA2 output internal register						
Fn.86	DA1 output gain	DA1 and DA2 output gain settings; the actual output value needs to be multiplied by the gain value for output, which is equivalent to the slope settings.	—	-10.00～10.00	1.00	○	Synchronous/ asynchronous
Fn.87	DA2 output gain						
Fn.88	DA1 output range selection	0: Output according to 0 to 10V Digital -100%～0～100% Analog 0～5V～10V 1: Output according to -10V ～ 10V Digital -100%～0～100% Analog -10 ~ 0 ~ 10V	—	0，1	0	○	Synchronous/ asynchronous
Fn.89	DA2 output range selection						
Fn.90	Range of speed reached	The state reached by the output speed when the difference between the set speed and the feedback speed is less than Fn.90 and the duration exceeds Fn.91	rpm	0～30000	15	○	Synchronous/ asynchronous
Fn.91	Speed reach window time		ms	0～30000	100	○	Synchronous/ asynchronous
Fn.92	Range of zero-speed reach	The state reached by output zero-speed when the difference between the feedback speed and the zero speed is less than Fn.92 and the duration is more than Fn.93	rpm	0～30000	5	○	Synchronous/ asynchronous
Fn.93	Zero-speed reach window time		ms	0～30000	100	○	Synchronous/ asynchronous
Fn.94	Range of torque reach	The state reached by the output torque when the difference between the set torque and the feedback torque is less than Fn.94 and the duration exceeds Fn.95	%	0～500.0	0	○	Synchronous/ asynchronous
Fn.95	Torque reach window time		ms	0～30000	0	○	Synchronous/ asynchronous
Fn.96	Range of zero-torque reach	The state reached by the output zero torque when the difference between the feedback torque and the zero torque is less than Fn.96 and the duration is more than Fn.97	%	0～500.0	0	○	Synchronous/ asynchronous
Fn.97	Zero-torque reach window time		ms	0～30000	0	○	Synchronous/ asynchronous
Fn.98	Auxiliary function selection	Bit0: PLC storage parameter disabled Bit1: Emergency stop action 0: Deceleration 1: Freedom	-	0～65535	0	○	Synchronous/ asynchronous
Fn.99	Reserved	—	—	—	—	—	—

Hn Interface Parameter Set

Function code	Name	Description	Unit	Parameter range	Default settings	Change	Applicable motor
Hn.00	ST enable terminal	0: PLC control 1: Enable input	—	0，1	0	○	Synchronous/ asynchronous
Hn.01	I1 multi-function input terminal selection	0: defined by internal PLC program 1: proximity switch signal input for directed stop (I5 only, inactive when other I-points set the same) 2: External fault input 3: Emergency stop input 4: Second motor selection 5: Star/delta conversion 6: Switching external contact signal of contactor 7: Forward limit switch input 8: Reverse limit switch input 9: Function PID parameter switching 10: Function PID integral reset 11: Magnetic pole position learning triggered 12: Second set of load limit triggered 100: Forward jog 101: Reverse jog 102: Zero speed shaft locking 103: Real-time positioning enabled 104: Zero-return positioning enabled 105: Swing function selection 106: Torque/speed switching 107: Position/speed switching 108: Motor enable	—	0～200	0	×	Synchronous/ asynchronous
Hn.02	I2 multi-function input terminal selection						
Hn.03	I3 multi-function input terminal selection						
Hn.04	I4 multi-function input terminal selection						
Hn.05	I5 multi-function input terminal selection						
Hn.06	I6 multi-function input terminal selection						
Hn.07	I7 multi-function input terminal selection						
Hn.08	I8 multi-function input terminal selection						
Hn.09	I9 multi-function input terminal selection						
Hn.10	I10 multi-function input terminal selection						
Hn.11	I11 multi-function input terminal selection						
Hn.12	I12 multi-function input terminal selection						
Hn.13	RET reset terminal	0: PLC control 1: Reset input	—	0，1	0	○	Synchronous/ asynchronous
Hn.14	Filter time constant for multifunction input terminal	Filter time for input terminals	ms	0～2000	0	○	Synchronous/ asynchronous

Function code	Name	Description	Unit	Parameter range	Default settings	Change	Applicable motor
Hn.15	Terminal trigger mode	DI terminal trigger mode; if set to normally off, it is active when on; if set to normally on, it is active when off, and configured by bit: 0: Normally off 1: Normally on bit0: ST bit7: I6 bit1: RET bit8: I7 bit2: I1 bit9: I8 bit3: I2 bit10: I9 bit4: I3 bit11: I10 bit5: I4 bit12: I11 bit6: I5 bit13: I12	—	0～65535	0	○	Synchronous/ asynchronous
Hn.16	Level selection of input terminals (for general model only)	0: active for external 0V 1: active for external 24V (for general model only)	—	0，1	0	○	Synchronous/ asynchronous
Hn.17	Q1 multi-function output terminal selection	0: Defined by internal PLC program 1: Drive ready 2: Zero speed 3: Speed arrived 4: Torque reached 5: Driver malfunction 6: Rough positioning completed 7: Precise positioning completed 8: Star/Angle Contactor 9: Star/corner connection status 10: Brake output 11: Motor encoder Z-phase output 12: Magnetic pole position learning completed 13: Reaching the positive soft limit 14: Reaching the reverse soft limit 15: Speed limit reached 16: Torque reaches the limit 17: Switching between first motor and second motor 18: Coarse range of follow-up error 19: Precision range of follow-up error 20: Servo Enable	—	0～20	0	×	Synchronous/ asynchronous
Hn.18	Q2 multi-function output terminal selection						
Hn.19	Q3 multi-function output terminal selection						
Hn.20	Q4 multi-function output terminal selection						
Hn.21	Q5 multi-function output terminal selection						
Hn.22	Q6 multi-function output terminal selection						
Hn.23	M0 relay output function selection						
Hn.24	M1 relay output function selection						

Function code	Name	Description	Unit	Parameter range	Default settings	Change	Applicable motor
Hn.25	Internal driver control word 1	0: inactive 1: active bit0: enable bit1: reset bit2: positioning triggered bit3: emergency stop triggered bit4: Reserved bit5: Zero-speed shaft locking bit6: Star/delta connection conversion triggered bit7: star/delta contactor contacts bit8: Magnetic pole position learning triggered bit9: Function PID parameter switching triggered bit10: position regulator deviation cleared bit11: Motor parameter identification bit12: Motor inertia identification bit13: Phase current gain identification bit14: Load inertia ratio	—	0～0xFFFF	0	○	Synchronous/ asynchronous
Hn.26	Internal driver control word 2	0: inactive 1: active bit0: FV calibration request bit1: FI calibration request bit2: Forward rotation bit3: Reverse rotation bit4: Out-of-phase enabled	—	0～0xFFFF	0	○	Synchronous/ asynchronous
Hn.27	Speed command selection	0: Base speed register (U1.00) 1: Jog speed register (Hn.28) 2: FV analog 3: FI analog 4: T2 first pulse input port 5: T3 second pulse input port 6: T4 second encoder input	—	0～6	0	×	Synchronous/ asynchronous
Hn.28	Low 16-bit set for jog speed	Jog speed settings with the resolution of 0.0001rpm	rpm	0～900000000	0	○	Synchronous/ asynchronous
Hn.29	High 16-bit set for jog speed						
Hn.30	Position command selection	0: Internal register (position value set by Hn.31 and Hn.32) 1: Motion control unit (CAM user) 2: Input port for the second encoder (T4) 3: Input port for the first pulse port (T2) 4: Input port for second pulse port (T3-24V) 11: Programmable position	—	0～11	0	×	Synchronous/ asynchronous
Hn.31	Low 16 bits of position-following commands	It is used as an incremental position command in pulse-following mode, and is the pulse command added for each regulation cycle	Pulse	-2147483647～ 2147483647	0	○	Synchronous/ asynchronous
Hn.32	High 16 bits of position-following commands						
Hn.33	Position feedback selection	0: First encoder (T5) 1: Second encoder (T4) 2: First pulse port (T2) 3: Second pulse port (T3-24V)	—	0～3	0	×	Synchronous/ asynchronous

Function code	Name	Description	Unit	Parameter range	Default settings	Change	Applicable motor
Hn.34	Torque command selection	0: Internal register (torque value set by Fn.64) 1: FV analog 2: FI analog 3: FT analog	—	0～3	0	×	Synchronous/ asynchronous
Hn.35	Analog calibration function selection	0: Calibration on 1: Calibration off	—	0，1	0	○	Synchronous/ asynchronous
Hn.36	Allowable min. threshold for analog calibration	The min. threshold value is the max. analog value × H1.36%, which is inactive for calibration below this value.	%	0～50	10	○	Synchronous/ asynchronous
Hn.37	Error alarm range for analog calibration points	Percentage of allowable deviation range for analog calibration points	%	0～100	20	○	Synchronous/ asynchronous
Hn.38	Forward analog offset	Set forward analog offset, which is active when Hn.35 is 1	%	0～65520	0	○	Synchronous/ asynchronous
Hn.39	Reverse analog offset	Set reverse analog offset, which is active when Hn.35 is 1	%	0～65520	0	○	Synchronous/ asynchronous
Hn.40	Speed of FV analog calibration point	Set the speed at the FV analog calibration point	rpm	0～65535	0	○	Synchronous/ asynchronous
Hn.41	Speed of FI analog calibration point	Set the speed at the FI analog calibration point	rpm	0～65535	0	○	Synchronous/ asynchronous
Hn.42	Analog filter time	Analog filter time	us	0～1500	1500	△	Synchronous/ asynchronous
Hn.43	Analog zero-speed dead zone range	It is considered to be zero speed when the digital for analog is less than this value	%	0～65520	3	○	Synchronous/ asynchronous
Hn.44	Max. analog speed	Max. speed corresponds to analog	rpm	0～60000	8000	○	Synchronous/ asynchronous
Hn.45	Automatic correction function for analog midpoint	0: Off 1: On	—	0，1	0	○	Synchronous/ asynchronous
Hn.46	Analog FV corresponds to low 16 bits of the speed	The speed that corresponds to the current analog FV with a parameter resolution of 0.0001rpm	rpm	-900000000～900000000	0	∗	Synchronous/ asynchronous
Hn.47	Analog FV corresponds to high 16 bits of the speed						
Hn.48	Analog FI corresponds to low 16 bits of the speed	The speed that corresponds to the current analog FI with a parameter resolution of 0.0001rpm	rpm	-900000000～900000000	0	∗	Synchronous/ asynchronous
Hn.49	Analog FI corresponds to high 16 bits of the speed						

Function code	Name	Description	Unit	Parameter range	Default settings	Change	Applicable motor
Hn.50	T0 port communication protocol selection	0: PLC communication 1: Upper computer communication 2: Quick start	—	0，1	1	○	Synchronous/ asynchronous
Hn.51	T2 pulse input port type selection	0: Inactive 1: A+B 2: PULSE+DIR	—	0～2	0	△	Synchronous/ asynchronous
Hn.52	T2 pulse count direction	0: Count up 1: Count down	—	0，1	0	○	Synchronous/ asynchronous
Hn.53	Numerator L for T2 pulse position electronic gear ratio	Numerator settings for T2 position pulse electronic gear ratio	—	-2147483647～ 2147483647	1	○	Synchronous/ asynchronous
Hn.54	Numerator H for T2 pulse position electronic gear ratio						
Hn.55	Denominator L for T2 pulse position electronic gear ratio	Denominator settings for T2 position pulse electronic gear ratio	—	-2147483647～ 2147483647	1	○	Synchronous/ asynchronous
Hn.56	Denominator H for T2 pulse position electronic gear ratio						
Hn.57	Numerator L for T2 pulse velocity electronic gear ratio	Numerator settings for T2 velocity pulse electronic gear ratio	—	-2147483647～ 2147483647	1	○	Synchronous/ asynchronous
Hn.58	Numerator H for T2 pulse velocity electronic gear ratio						
Hn.59	Denominator L for T2 pulse velocity electronic gear ratio	Denominator settings for T2 velocity pulse electronic gear ratio	—	-2147483647～ 2147483647	1	○	Synchronous/ asynchronous
Hn.60	Denominator H for T2 pulse velocity electronic gear ratio						
Hn.61	T2 pulse velocity factor	U2.20 = input pulse frequency × 60/ (Hn.61 × 4)	Pulse	0～65535	1024	○	Synchronous/ asynchronous
Hn.62	T2 pulse velocity feedback filter time	T2 pulse velocity feedback filter time settings	ms	0～10000	4	○	Synchronous/ asynchronous
Hn.63	T3 pulse input port type selection	0: IO mode 1: A+B 2: PULSE+DIR	—	0～2	0	△	Synchronous/ asynchronous
Hn.64	T3 pulse count direction	0: Count up 1: Count down	—	0，1	0	○	Synchronous/ asynchronous
Hn.65	Numerator L for T3 pulse position electronic gear ratio	Numerator settings for T3 position pulse electronic gear ratio	—	-2147483647～ 2147483647	1	○	Synchronous/ asynchronous
Hn.66	Numerator H for T3 pulse position electronic gear ratio						

Function code	Name	Description	Unit	Parameter range	Default settings	Change	Applicable motor
Hn.67	Denominator L for T3 pulse position electronic gear ratio	Denominator settings for T3 position pulse electronic gear ratio	—	-2147483647～2147483647	1	○	Synchronous/ asynchronous
Hn.68	Denominator H for T3 pulse position electronic gear ratio						
Hn.69	Numerator L for T3 pulse velocity electronic gear ratio	Numerator settings for T3 velocity pulse electronic gear ratio	—	-2147483647～2147483647	1	○	Synchronous/ asynchronous
Hn.70	Numerator H for T3 pulse velocity electronic gear ratio						
Hn.71	Denominator L for T3 pulse velocity electronic gear ratio	Denominator settings for T3 velocity pulse electronic gear ratio	—	-2147483647～2147483647	1	○	Synchronous/ asynchronous
Hn.72	Denominator H for T3 pulse velocity electronic gear ratio						
Hn.73	T3 pulse velocity factor	U2.21 = input pulse frequency × 60/ (Hn.73 × 4)	Pulse	0～65535	1024	○	Synchronous/ asynchronous
Hn.74	T3 pulse velocity feedback filter time	T3 pulse velocity feedback filter time settings	ms	0～10000	4	×	Synchronous/ asynchronous
Hn.75	T3 pulse filter selection (This parameter indicates the cutoff frequency of the low-pass filter)	0：30 8：0.625 1：15 9：0.4688 2：7.5 10：0.375 3：3.75 11：0.3125 4：2.5 12：0.2344 5：1.875 13：0.1875 6：1.25 14：0.1563 7：0.9375 15：0.1172	MHz	0～15	6	△	Synchronous/ asynchronous
Hn.76	T3 pulse direction signal filter frequency	It indicates the cutoff frequency of the low-pass filter, Fre=60/Hn.76, with no filter when set to 0	kHz	0～600	60	○	Synchronous/ asynchronous
Hn.77	Input port type selection for external servo encoder	0: Inactive 1: Orthogonal 2: PULSE & DIR	—	0～2	0	△	Synchronous/ asynchronous
Hn.78	Numerator L for T4 pulse position electronic gear ratio	Numerator settings for T4 position pulse electronic gear ratio	—	-2147483647～2147483647	1	○	Synchronous/ asynchronous
Hn.79	Numerator H for T4 pulse position electronic gear ratio						

Function code	Name	Description	Unit	Parameter range	Default settings	Change	Applicable motor
Hn.80	Denominator L for T4 pulse position electronic gear ratio	Denominator settings for T4 position pulse electronic gear ratio	—	-2147483647～2147483647	1	○	Synchronous/ asynchronous
Hn.81	Denominator H for T4 pulse position electronic gear ratio						
Hn.82	Numerator L for T4 pulse velocity electronic gear ratio	Numerator settings for T4 velocity pulse electronic gear ratio	—	-2147483647～2147483647	1	○	Synchronous/ asynchronous
Hn.83	Numerator H for T4 pulse velocity electronic gear ratio						
Hn.84	Denominator L for T4 pulse velocity electronic gear ratio	Denominator settings for T4 velocity pulse electronic gear ratio	—	-2147483647～2147483647	1	○	Synchronous/ asynchronous
Hn.85	Denominator H for T4 pulse velocity electronic gear ratio						
Hn.86	Min. analog speed	It is used to limit the min. speed during analog speed control; if the current analog speed is less than Hn.86, the speed will be executed according to the set Hn.86. When this parameter is 0, the analog low-speed control is off; when Hn.86 is not 0, the analog dead zone is invalid.	rpm	0～6000.0	0	○	Synchronous/ asynchronous
Hn.87	T4 pulse direction selection	0：DB 1：DZ	—	0，1	0	○	Synchronous/ asynchronous
Hn.88	Reserved	—	—	—	—	—	—
Hn.89	External switch source selection	0: DI05 1: T5-Z This parameter is used to select an external switch source; If 0, the external input point DI05 is used; If 1, the z signal of the T5 port encoder is used. This signal is a 5V differential signal input, and when it is selected, the original T5 port z-pass function will disappear. As the Z signal of the T5 port is used as an external switch, and the counting and latching registers share the register of the DI05 external switch, the T5-Z switch function can only be used on TTL machines without smart-card encoders;	—	0，1	0	○	Synchronous/ asynchronous
Hn.90	DI05 Positioning pre-turns	When the external DI05 is used for positioning, this parameter is used to determine the number of times the DI05 has been passed, which is equivalent to a kind of DI05 filter; It is 0 by default, indicating passing once; Other values indicate the number of times DI05 has been passed;	—	0～150	0	○	Synchronous/ asynchronous

Function code	Name	Description	Unit	Parameter range	Default settings	Change	Applicable motor
Hn.91	DI05 interrupt latch signal selection	User-defined DI05 latch signal selection; this parameter can be used to configure the latch data used by the DI05 user. Units digit: Configure latch signal 1 type Tens digit: Configure latch signal 2 type Latch signal: . 0: Motor encoder data latching 0: Motor encoder data latching (T5) 1: External encoder data latching (T4) 2: External T2 pulse data latching (T2) 3: External 24V pulse data latching (T3)	—	0～99	0	○	Synchronous/ asynchronous
Hn.92	DI05 interrupt latch signal data 1L	Latching signal data selected according to the units digit of Hn.90; this is a read-only parameter for internal PLC and user-defined use only.	—	0～65535	0	＊	Synchronous/ asynchronous
Hn.93	DI05 interrupt latch signal data 1H						
Hn.94	DI05 interrupt latch signal data 2L	Latching signal data selected according to the tens digit of Hn.90; this is a read-only parameter for internal PLC and user-defined use only.	—	0～65535	0	＊	Synchronous/ asynchronous
Hn.95	DI05 interrupt latch signal data 2H						
Hn.96	Reserved	—	—	—	—	—	—
～							
Hn.99							

Pn Protection Parameters

Function code	Name	Description	Unit	Parameter range	Default settings	Change	Applicable motor
Pn.00	Overvoltage alarm value for bus voltage	When the bus voltage exceeds this value, it alarms overvoltage E1.OV	V	0～1000	800	○	Synchronous/ asynchronous
Pn.01	Undervoltage alarm window value for bus voltage	When the bus voltage falls below this value and reaches the preset window time, it alarms undervoltage E1.UV	V	0～1000	400	○	Synchronous/ asynchronous
Pn.02	Undervoltage alarm window time for bus voltage		s	0～60.0	0.5	○	Synchronous/ asynchronous
Pn.03	Undervoltage braking function	0: Off 1: Emergency shutdown, treated in the same way as an emergency stop	—	0，1	0	○	Synchronous/ asynchronous
Pn.04	Encoder Z signal alarm shield	0: shielded with no alarm detection 1: Alarm E1.EC when encoder Z-phase fails	—	0～65535	1	○	Synchronous/ asynchronous
Pn.05	Encoder battery alarm shield	0: Shielded with no alarm detection 1: Alarm E1.EP when encoder fails	—	0～65535	1	○	Synchronous/ asynchronous
Pn.06	Bus encoder alarm code	Internal alarm message of bus encoder	—	0～65535	0	＊	Synchronous/ asynchronous
Pn.07	Communication error value of bus encoder	CRC check error count value of bus encoder	—	0～65535	0	＊	Synchronous/ asynchronous
Pn.08	Fault alarm time for rotary transformer	It will alarm E1.EL when the fault signal retention time of the rotary transformer exceeds this time.	ms	0～20000	20	○	Synchronous/ asynchronous
Pn.09	Self-test error count for encoder	It indicates LOT fault error count when a rotary transformer is used. It indicates fault error count of the encoder itself when a Renishaw encoder is used.	—	0～65535	0	＊	Synchronous/ asynchronous
Pn.10	Temperature protection selection	0: Temperature switch 1: Temperature resistor PT3C 2: Temperature resistor KTY84 3: Temperature resistor PT100 5: Reserve 9：Shield	—	0～9	0	○	Synchronous/ asynchronous
Pn.11	Temperature channel selection	Thermistor/temperature switch channel selection; when selecting multiple channels, the motor temperatures of the U2 set are displayed according to the max. temperature, which is selected by bit:	—	0～65535	1	○	Synchronous/ asynchronous
Pn.12	Alarm value of motor temperature sensor	0: Shielded, with no detection of motor temperature Others: it alarms E1.OH3 when the detected temperature exceeds this value	℃	0～200	110	○	Synchronous/ asynchronous
Pn.13	Motor overspeed alarm value	0: Shielded, with no detection of motor speed feedback Others: it will alarm E1.OS when the motor speed feedback exceeds (this value × Dn.09).	%	0～1000	110	○	Synchronous/ asynchronous

Function code	Name	Description	Unit	Parameter range	Default settings	Change	Applicable motor
Pn.14	Motor stall alarm value	0: Shielded, with no detection of motor speed feedback Others: it alarms when the motor speed feedback exceeds this value; if the difference between the motor speed feedback and the output speed is greater than (output speed × Pn.14) and the duration exceeds Pn.15, it alarms E1.SE	%	0～100.0	40.0	○	Synchronous/ asynchronous
Pn.15	Stall alarm detection time		s	0～3000.0	4.0	○	Synchronous/ asynchronous
Pn.16	The position following error exceeds the threshold	1: Shield, do not detect position following error Other: when the position following error exceeds this value, alarm E2.OP	rev	0～1000.0	0	○	Synchronous/ asynchronous
Pn.17	Reserved	—	—	—	—	—	—
Pn.18	Speed value for low-speed overload alarm	0: Direct alarm Others: when the motor speed feedback is lower than Pn.18, with actual current exceeding Pn.20×Dn.01 and duration exceeding Pn.19, it will alarm E1.OL2	rpm	0～6000.0	5.0	○	Synchronous/ asynchronous
Pn.19	Time threshold for low-speed overload alarm		s	0～3000.0	2.0	○	Synchronous/ asynchronous
Pn.20	Current multiplier for low-speed overload alarm		—	0～100.0	1.2	○	Synchronous/ asynchronous
Pn.21	Motor overload protection gain	It is a parameter of motor overload protection, which can change the features of the protection curve.	—	0.20～10.00	1.00	○	Synchronous/ asynchronous
Pn.22	Torque limit speed	This parameter is used for low-speed torque control and is the upper limit of the active speed of torque control.	rpm	0.1～3000.0	15	○	Synchronous/ asynchronous
Pn.23	Blocking torque control	Max. torque load ratio at blocking	%	0～1000	100	○	Synchronous/ asynchronous
Pn.24	Runaway alarm	0: Off 1: On	—	0，1	0	○	Synchronous/ asynchronous
Pn.25	Battery alarm clear	If the multi-turn absolute encoder alarms EP, when the wiring and battery are OK, this parameter can be changed to 1. If this parameter is changed to 0, it means that the alarm can be eliminated, and restarting or resetting the driver can eliminate the alarm. If this parameter does not change to 0 by itself, it means that there is still a problem with the battery wiring. Please check again.	—	0，1	0	○	Synchronous/ asynchronous
Pn.26	OC3 protection level	This parameter is only valid for drivers 18.5KW and above 0: OC3 alarm level is 1.033 times Hall per-unit value 1: OC3 alarm level is 1.19 times the Hall per-unit value	—	0，1	0	△	Synchronous/ asynchronous
Pn.27	Carrier limit switch	This parameter is only valid for drivers of 18.5KW and above 0: Carrier frequency up to 4K 1: Carrier frequency up to 8K	—	0，1	0	△	Synchronous/ asynchronous
Pn.28	EE alarm shield	0: No shield with power code read from chassis EE 1: Alarm shielded with power code read from motherboard	—	0，1	0	△	Synchronous/ asynchronous

Function code	Name	Description	Unit	Parameter range	Default settings	Change	Applicable motor
Pn.29	TA real-time detection disabled	0: On 1: Off	—	0，1	0	△	Synchronous/ asynchronous
Pn.30	Current fault level	Current fault level display	—	0～65535	0	∗	Synchronous/ asynchronous
Pn.31	Level 1 troubleshooting	0: Interrupt enable 1: Armature short circuit	—	0，1	0	○	Synchronous/ asynchronous
Pn.32	Level 2 troubleshooting	0: Interrupt enable 1: Armature short circuit	—	0，1	0	○	Synchronous/ asynchronous
Pn.33	Level 3 troubleshooting	0: Interrupt enable 1: Armature short circuit 2： Emergency shutdown	—	0～2	0	○	Synchronous/ asynchronous
Pn.34	Reserved	—	—	—	—	—	—
Pn.35	Fault alarm shield of external encoder	0: Shielded with no alarm detection 1: it alarms E1.EC2 when the encoder fails	—	0，1	0	○	Synchronous/ asynchronous
Pn.36	Communication error count of external bus encoder	CRC check error count value for bus encoder	—	0～65535	0	∗	Synchronous/ asynchronous
Pn.37	Self-test error count of external bus encoder	It indicates a LOT fault error count when a rotary transformer is used, and an encoder fault error count when a Renishaw encoder is used.	—	0～65535	0	∗	Synchronous/ asynchronous
Pn.38	Self-test error code of external bus encoder	Internal alarm messages of bus encoder	—	0～65535	0	∗	Synchronous/ asynchronous
Pn.39	Double position closed-loop deviation clearing cycles	The number of turns used to reset the dual position closed-loop deviation (Pn.41) is the number of turns the motor encoder runs	rev	0～300	2	○	Synchronous/ asynchronous
Pn.40	Double position closed-loop deviation alarm threshold	When Pn.41 exceeds the set Pn.40, the alarm indicates that the internal and external encoder errors are too large (E1. OP2)	rev	0～30.000	1	○	Synchronous/ asynchronous
Pn.41	In the dual position closed-loop mode	the error between the motor encoder and the external encoder is displayed in turns, based on the number of turns of the external encoder	rev	0～65.535	0	∗	Synchronous/ asynchronous
Pn.42	Reserved	—	—	—	—	—	—
Pn.43	OC2 alarm gain	It is used for OC2 alarm judgment and set to 1 by default, indicating that the alarm threshold for OC2 is half of the Hall current.	—	0.5～1.5	1	○	Synchronous/ asynchronous
Pn.44	Line resistance detection	0: Off 1: On	—	0，1	0	×	Synchronous/ asynchronous
Pn.45	UV line resistance	UV line resistance display	—	0～65.535	0	∗	Synchronous/ asynchronous
Pn.46	VW line resistance	VW line resistance display	—	0～65.535	0	∗	Synchronous/ asynchronous
Pn.47	WU line resistance	WU line resistance display	—	0～65.535	0	∗	Synchronous/ asynchronous

Function code	Name	Description	Unit	Parameter range	Default settings	Change	Applicable motor
Pn.48	Reserved	—	—	—	—	—	—
Pn.49							
Pn.50	First motor temperature display	It displays the first temperature value	℃	0～300	0	∗	Synchronous/ asynchronous
Pn.51	Second motor temperature display	It displays the second temperature value	℃	0～300	0	∗	Synchronous/ asynchronous
Pn.52	Third motor temperature display	It displays the third temperature value	℃	0～300	0	∗	Synchronous/ asynchronous
Pn.53	Fourth motor temperature display	It displays the fourth temperature value	℃	0～300	0	∗	Synchronous/ asynchronous
Pn.54	Temperature switch state	It displays the state of multiple temperature switches, where 1 means off, 0 imeans on, which is displayed by bit: bit0: first temperature switch state bit1: second temperature switch state bit2: third temperature switch state bit3: fourth temperature switch state	℃	0～300	0	∗	Synchronous/ asynchronous
Pn.55	Alarm thresholds for second temperature	0: Shielded, with no motor temperature detection Others: it alarms E1.OH3 when detected second temperature exceeds this value	℃	0～200	110	○	Synchronous/ asynchronous
Pn.56	Alarm thresholds for third temperature	0: Shielded, with no motor temperature detection Others: it alarms E1.OH3 when detected third temperature exceeds this value	℃	0～200	110	○	Synchronous/ asynchronous
Pn.57	Alarm thresholds for fourth temperature	0: Shielded, with no motor temperature detection Others: it alarms E1.OH3 when detected fourth temperature exceeds this value	℃	0～200	110	○	Synchronous/ asynchronous
Pn.58	Inactive bus data count	Count value of inactive master commands, modes, or control words received by the driver	—	0～65535	0	∗	Synchronous/ asynchronous
Pn.59	Master interrupt watchdog shield	0: Unshielded 1: Shielded	—	0，1	0	○	Synchronous/ asynchronous
Pn.60	OC5 Alarm shield	0: Unshielded 1: Shielded	—	0，1	0	○	Synchronous/ asynchronous
Pn.61	Reserved	—	—	—	—	—	—
Pn.62	Quick alarm reset	0: Disabled 1: Enabled	—	0，1	0	○	Synchronous/ asynchronous
Pn.63	Brake current limit on	0: Disabled 1: Enabled	—	0，1	0	○	Synchronous/ asynchronous

Function code	Name	Description	Unit	Parameter range	Default settings	Change	Applicable motor
Pn.64	Braking current limit threshold	Set the bus voltage threshold at which the braking current limit is enabled. When the bus voltage exceeds this threshold, current limit is activated to reduce the current bus voltage.	v	650～800	750	○	Synchronous/ asynchronous
Pn.65	Braking current limit Kp	Proportional gain of the braking current limit regulator	—	0～20000	200	○	Synchronous/ asynchronous
Pn.66	Braking current limit Ti	Integral time of braking current limit regulator	—	0～20000	2000	○	Synchronous/ asynchronous
Pn.67	Braking current limit output	The actual output of the braking current limit module, which is used for current limit of the speed output.	%	0～100	0	＊	Synchronous/ asynchronous
Pn.68	Braking on time limit	If the braking on time continuously exceeds Pn.68, then it alarms E1.Br. This alarm is shielded if this parameter is set to 0.	s	0～100	10	○	Synchronous/ asynchronous
Pn.69	Module protection switch	Units bit: 1: Enable LOP out-of-phase protection, others: inactive Tenth bit: 1: Enable low-speed and high-voltage protection, others: inactive	—	0～65535	0	○	Synchronous/ asynchronous
Pn.70	PA alarm shield	0: unshielded 1: shielded No valid range checks of parameters is performed when this function is shielded.	—	0，1	0	○	Synchronous/ asynchronous
Pn.71	Smart card read address	It is used to read the address of the data in the smart card. There are 85 data in total, so the address corresponds to 0 to 84.	—	0～84	0	○	Synchronous/ asynchronous
Pn.72	Smart card read data	Data value read from the smart card according to address Pn.71	—	0～65535	0	＊	Synchronous/ asynchronous
Pn.73	485 module communication error value	485 module communication CRC check error count value	-	0~65535	0	＊	Synchronous/ asynchronous
Pn.74	Reserved	—	—	—	—	—	—
Pn.75 ～ Pn.89	Manufacturer monitoring parameters	See OC3 response sheet for details	—	—	—	—	—
Pn.90	Instructions for special alarms	See alarm description sheet	—	0～65535	0	＊	Synchronous/ asynchronous
Pn.91	Double feedback position error window	Set the error alarm value, exceeding the value, the alarm This parameter is 0 to block the double feedback error alarm function	r	0～60000	0	○	Synchronous/ asynchronous

Function code	Name	Description	Unit	Parameter range	Default settings	Change	Applicable motor
Pn.92	Double feedback speed error gear ratio numerator L	The double feedback error alarm electronic gear ratio numerator and denominator configuration is used to convert the position of the motor end into the position of the load end. For example, when the motor rotates 10 turns and the load rotates 3 turns, set Pn.92=10 and Pn.94=3 Motor position motpos, load position axlepos, error velocity errpos, motor encoder resolution enc1resol, second encoder resolution enc3resol Then the formula is as follows: errpos=motpos* denominator *enc2resol/ numerator /nc1resol-axlepos. When errpos is greater than the set Pn.91, E1.OP3 alarm will appear.	—	-2147483647 ～2147483647	1	○	Synchronous/ asynchronous
Pn.93	Double feedback speed error gear ratio numerator H						
Pn.94	Double feedback speed error gear ratio female L		—	-2147483647 ～2147483647	1	○	Synchronous/ asynchronous
Pn.95	Double feedback speed error gear ratio H						
Pn.96	Double feedback error gear ratio source	0: For internal parameters, use Pn.92 and Pn.94 1: Use bus gear ratioBn.16、Bn.18	—	0，1	0	○	Synchronous/ asynchronous
Pn.97	Double feedback error clearing turn number setting	The double feedback error reset cycle number is set, and the cumulative value is reset when the cycle number is reached	r	0～60000	0	○	Synchronous/ asynchronous
Pn.98	Double feedback error display	Displays the double feedback error value	r	0～60000	0	○	Synchronous/ asynchronous
Pn.99	Fan opening temperature	Pre set the temperature for the servo to turn on the fan Pn.99<=10: normally open Pn.99>10: Turn on the fan when the servo module temperature exceeds the preset Pn.99, and turn off the fan when it is below Pn.99-10	-	0～50	50	＊	Synchronous/ asynchronous

Sn System Parameter Set

Function code	Name	Description	Unit	Parameter range	Default settings	Change	Applicable motor
Sn.00	Advanced password	Some parameters of Sn can be modified after entering the password. Sn system parameters are critical parameters of the driver and should be modified with caution.	—	0～65535	0	×	Synchronous/ asynchronous
Sn.01	Power code	Set the power code of the driver, which needs to be modified by professionals	—	0～255	0	△	Synchronous/ asynchronous
Sn.02	Hall per-unit value	Set Hall per-unit value	0.1A	0～50000	0	∗	Synchronous/ asynchronous
Sn.03	Rated driver power	Display of the driver's rated power	kW	0～6000.0	0	∗	Synchronous/ asynchronous
Sn.04	Input driver voltage	0：380 1：220	—	0，1	0	∗	Synchronous/ asynchronous
Sn.05	Operating voltage of brake unit	Set the starting voltage for the brake unit to turn on. Settings for 200v servo: 350v-400v Settings for 400v servo: 650v-780v	V	0～1000	700	×	Synchronous/ asynchronous
Sn.06	Carrier frequency	Set the carrier frequency of the driver; this parameter will be adjusted automatically according to the setting of Sn.01, which requires the user to be careful in modification. 1：2 5：10 2：4 6：12 3：6 8：16 4：8	kHz	1～8	4	△	Synchronous/ asynchronous
Sn.07	Main program version number	Main program software version number	—	—	0	∗	Synchronous/ asynchronous
Sn.08	Motor control program version number	Version number of the motor control program software	—	—	0	∗	Synchronous/ asynchronous
Sn.09	PLC program version number	Version number of the PLC program	—	—	0	∗	Synchronous/ asynchronous
Sn.10	Smart encoder card version number	Version number of the smart encoder card program	—	—	0	∗	Synchronous/ asynchronous
Sn.11	PLC scan cycle	The scanning cycle of PLC	us	0～65535	0	∗	Synchronous/ asynchronous
Sn.12	PLC min. execution cycle	Minimum execution cycle recorded during PLC operation	us	—	0	∗	Synchronous/ asynchronous
Sn.13	PLC max. execution cycle	Maximum execution cycle recorded during PLC operation	us	—	0	∗	Synchronous/ asynchronous
Sn.14	Max. current display	Max. valid value for output current of the monitored driver	A	0～6000.0	0	○	Synchronous/ asynchronous
Sn.15	Torque current set	The set torque current	A	-3000.00～3000.0	0	∗	Synchronous/ asynchronous
Sn.16	Magnetizing current set	The set magnetizing current	A	-3000.00～3000.0	0	∗	Synchronous/ asynchronous
Sn.17	Torque current feedback	Torque current feedback	A	-3000.00～3000.0	0	∗	Synchronous/ asynchronous
Sn.18	Magnetizing current feedback	Magnetizing current feedback	A	-3000.00～3000.0	0	∗	Synchronous/ asynchronous
Sn.19	U-phase current sampling	AD value for U-phase current sampling	—	0～4095	0	∗	Synchronous/ asynchronous

Function code	Name	Description	Unit	Parameter range	Default settings	Change	Applicable motor
Sn.20	V-phase current sampling	AD value for V-phase current sampling	—	0～4095	0	∗	Synchronous/ asynchronous
Sn.21	W-phase current sampling	AD value for W-phase current sampling	—	0～4095	0	∗	Synchronous/ asynchronous
Sn.22	Motor control program update	1: Motor control program update	—	0～200	0	△	Synchronous/ asynchronous
Sn.23	Time limit settings	Enter the password first, then set the allowable cumulative power-up time; when the setting value is 0, the time of use is no longer limited.	h	0～65535	0	○	Synchronous/ asynchronous
Sn.24	PWM interrupt program execution time	PWM interrupt program execution time display	us	0～65535	0	∗	Synchronous/ asynchronous
Sn.25	Parameter backup identification	If this value is 888, it means there is valid data in the parameter backup area.	—	0～65535	0	∗	Synchronous/ asynchronous
Sn.26	Hall V-phase current gain	Results after Hall amplitude calibration	—	3000～5000	4096	△	Synchronous/ asynchronous
Sn.27	Non-standard application version	Version number of the non-standard main program	—	0～65535	0	∗	Synchronous/ asynchronous
Sn.28	Non-standard control program version	Version number of the non-standard motor program	—	0～65535	0	∗	Synchronous/ asynchronous
Sn.29	Smart card parameter version	Version of the smart card parameters	—	0～65535	0	∗	Synchronous/ asynchronous
Sn.30	Application hardware version	Version of application hardware	—	0～65535	0	∗	Synchronous/ asynchronous
Sn.31	Control hardware version	Version display for application hardware	—	0～65535	0	∗	Synchronous/ asynchronous
Sn.32	A2 / A3 display selection	0: Parameter data display 1: Corresponding parameter address display	—	0，1	0	○	Synchronous/ asynchronous
Sn.33	ADC interrupt execution cycle	The time of AD interrupt execution	us	0～65535	0	∗	Synchronous/ asynchronous
Sn.34	Low Module Power Consumption	This function can reduce the overall heat emission of the driver module; however, the harmonics of running torque fluctuation will increase after turning on this function, which can also lead to the rise of motor heat. 0: Disabled 1: Enabled	—	0，1	0	○	Synchronous/ asynchronous
Sn.35	1ms interrupt program execution time	The execution time of interrupt for 1ms	us	0～65535	0	∗	Synchronous/ asynchronous
Sn.36	Current regulation cycle	It is the current regulation cycle and is associated with the carrier cycle	us	0～65535	0	∗	Synchronous/ asynchronous
Sn.37	1vpp card program application version	1vpp card program application version display	—	0～65535	0	∗	Synchronous/ asynchronous

D18 DRIVER

6

Parameter Settings by Functions

This section describes the user’s parameter settings and debugging according to the functions used.

Analog Speed Control.....6-2
Pulse Velocity Control.....6-4
Analog Rigid Tapping.....6-5
Pulse Rigid Tapping / Pulse Position.....6-6
Directed Stop.....6-8
Swing.....6-10
Operator Panel Operation.....6-11
modbus Communication Settings.....6-11
Star/delta conversion.....6-12
S-curve.....6-14
Fieldbus Applications.....6-14

6.1 Analog Speed Control

6.1.1 Port definition and functional parameters

Analog	Signal	Function	Relevant Parameters to be Modified
±10V analog voltage	FV	±10V analog voltage input	A2.01=0 A2.15=0
	FC	Analog voltage input common	
	I1	Operation enable (forward or reverse rotation is determined by analog voltage polarity)	
0~10V analog voltage	FI	0 to 10V analog voltage input	A2.01=1 A2.15=0
	FC	Analog voltage input common	
	I1	Forward rotation	
	I2	Reverse rotation	

6.1.2 Parameters related to analog speed control

Function Code	Name	Description	Unit	Range	Default Settings
A3.23	Max. speed for analog speed control of 10V	The max. motor speed for analog voltage input of 10V when setting analog speed control	rpm	0-60000	6000
A3.24	Acceleration time during speed control	Speed loop acceleration time during speed control settings	0.01s/Krpm	0～20000	80
A3.25	Deceleration time for speed control	Speed loop deceleration time during speed control settings	0.01s/Krpm	0～20000	80
A3.27	Speed loop proportional gain for speed control	Set the speed loop proportional gain Kp. The larger the value, the higher the gain and the greater the rigidity.	-	0～65535	100
A3.28	Speed loop integral time for speed control	Set the speed loop's speed integral time constant Ti. The smaller the value, the greater the rigidity.	-	0～65535	40

6.1.3 Acceleration and deceleration control curve

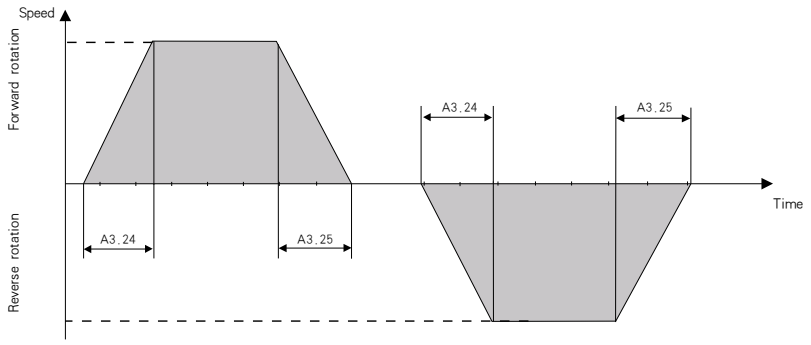

6.1.4 Analog calibration and related parameters

Function Code	Name	Description	Unit	Range	Default Settings
Hn.35	Analog calibration function selection	0: Calibration on 1: Calibration off	-	0，1	0
Hn.36	Allowable min. threshold for analog calibration	The min. threshold value is the max. analog value × H1.36%, which is inactive for calibration below this value.	%	0～50	10
Hn.37	Error alarm range for analog calibration points	Percentage of allowable deviation range for analog calibration points	%	0～100	20
Hn.38	Forward analog offset	Set forward analog offset, which is active when Hn.35 is 1	LSB	0～65520	0
Hn.39	Reverse analog offset	Set reverse analog offset, which is active when Hn.35 is 1	LSB	0～65520	0
U2.09	FV Analog Input Voltage Value	FV Analog Input Voltage Monitoring	V	-10.00～10.00	0
U2.10	FI Analog Input Voltage Value	FI Analog Input Voltage Monitoring	V	0～10.00	0
Hn.40	Speed of FV analog calibration point	Set the speed at the FV analog calibration point	rpm	0～65535	0
Hn.41	Speed of FI analog calibration point	Set the speed at the FI analog calibration point	rpm	0～65535	0
Hn.42	Analog filter time	Analog filter time	us	0～1500	1500
Hn.43	Analog zero-speed dead zone range	It is considered to be zero speed when the digital for analog is less than this value	LSB	0～65520	2
Hn.44	Max. analog speed	Max. speed corresponds to analog	rpm	0～60000	8000
Hn.45	Automatic correction function for analog midpoint	0: Off 1: On	-	0，1	0

6.1.5 Description of analog calibration (take FV as an example)

Analog calibration is a function designed to keep the executed speed of the driver in line with the speed command issued by the CNC system and to minimize speed deviation as much as possible. Analog calibration is required when the executed speed of the driver deviates from the speed issued by the CNC system.

The unit of analog calibration is rpm. The system inputs the 0 rpm command in MDI mode, then sets Hn.40 to 0, and the calibration starts at this moment. After that, the system sends out the corresponding speed command for whichever point you want to calibrate, and sets Hn.40 to the corresponding data. Every time Hn.40 is updated, the driver automatically calculates the calibration factor as follows:

For example: the system executes M3 S3000, and the driver displays F. 2990, thus the actual running speed deviates from the command issued by the system by 10 revolutions. At this time, it is necessary to set the parameter Hn.40=3000 (the setting for reverse calibration and forward calibration is the same; when the system executes M4 S3000, the set parameter is Hn.40=3000).

The calibration process is as follows (take the max. speed A3.23 = 8000rpm as an example):

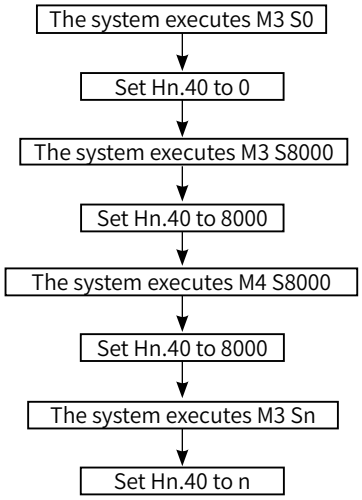

Note: When calibrating for the first time (i.e., Hn.40=0), the max. speed of ±10V must be calibrated before the other speeds can be calibrated.

6.2 Pulse Velocity Control

6.2.1 Port definitions and functional parameters

Forward and reverse rotation at orthogonal pulse velocity

Definition	Signal	Function	Relevant Parameters to be Modified
Enable control	I1	Forward and reverse enable (forward and reverse determined by pulse direction)	A2.15=1
Pulse import port	PA+	A-phase input of orthogonal pulse	A2.17=1 A2.16=15
	PA-		
	DB+	B-phase input of orthogonal pulse	
	DB-		
	I11	A-phase input for 24V high-speed pulse	A2.17=2 A2.16=15
	I12	B-phase input for 24V high-speed pulse	
	SA+	A-phase input of orthogonal pulse	A2.17=0 A2.16=15
	SA-		
	PB+	B-phase input of orthogonal pulse	
	PB-		

Direction + Forward and Reverse Rotation of Pulse Velocity

Definition	Signal	Function	Relevant Parameters to be Modified
Enable control	I1	Forward and reverse enable (forward and reverse determined by pulse direction)	A2.15=1
Pulse import port	PA+	Pulse signal	A2.17=1 A2.16=1
	PA-		
	DB+	Directional signal	
	DB-		
	I11	24V high-speed pulse signal	A2.17=2 A2.16=1
	I12	24V high-speed directional signal	
	SA+	Pulse signal	A2.17=0 A2.16=1
	SA-		
	PB+	Directional signal	
	PB-		

6.2.2 Parameters related to pulse velocity control

Function Code	Name	Description	Unit	Range	Default Settings
A3.24	Acceleration time during speed control	Speed loop acceleration time during speed control settings	0.01s/Krpm	0～20000	80
A3.25	Deceleration time for speed control	Speed loop deceleration time during speed control settings	0.01s/Krpm	0～20000	80
A3.27	Speed loop proportional gain for speed control	Set the speed loop proportional gain Kp. The larger the value, the higher the gain and the greater the rigidity.	—	0～65535	100
A3.28	Speed loop integral time for speed control	Set the speed loop's speed integral time constant Ti. The smaller the value, the greater the rigidity.	—	0～65535	40

6.2.3 Pulse control sequence diagram

The single pulse control interface is shown in the table below and the control timing is shown on the right.

Control terminal	Function
SA+	PULSE+
SA-	PULSE-
PB+	DIR+
PB-	DIR-

Pulse interface between CNC system and D18

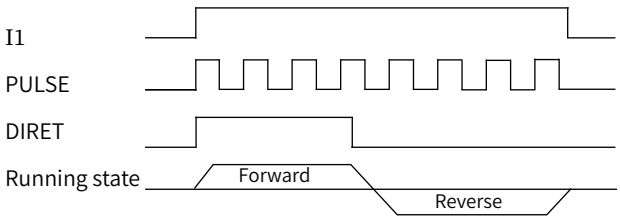

Sequence diagram for single pulse input

The dual-pulse control interface is shown in the table below, and the control timing is shown on the right.

Control terminal	Function
SA+	PA+
SA-	PA-
PB+	PB+
PB-	PB-

Pulse interface between CNC system and D18

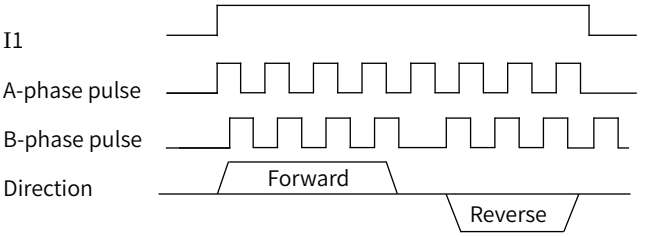

Sequence diagram for dual-pulse input

6.2.4 Acceleration and deceleration control curve

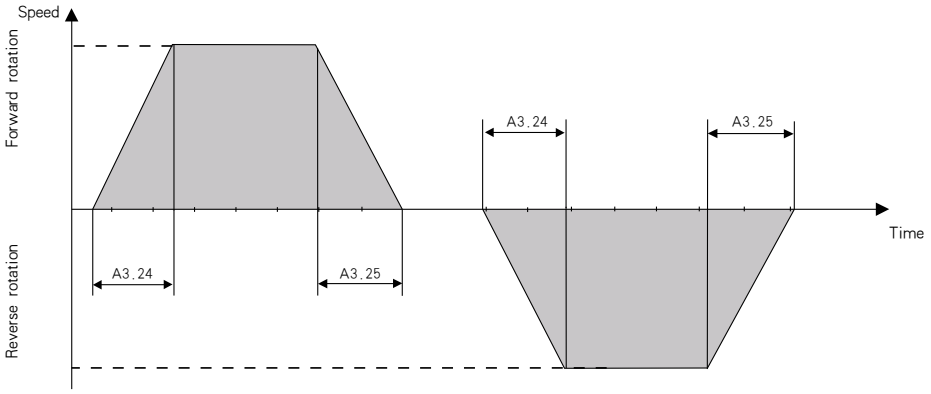

6.3 Analog Rigid Tapping

6.3.1 Port definitions and functional parameters

Analog	Signal	Function	Relevant Parameters to be Modified
±10V analog voltage	FV	±10V analog voltage input	A2.01=0 A2.19=0
	FC	Analog voltage input common	
	I4	Rigid tapping (forward or reverse rotation is determined by analog voltage polarity)	

6.3.2 Parameters related to analog rigid tapping

Function Code	Name	Description	Unit	Range	Default Settings
A3.30	Max speed limit for rigid tapping	Set max. motor speed with analog rigid tapping	rpm	0～60000	1500
A3.31	Rigid tapping acceleration time	Set speed loop acceleration time with analog rigid tapping	0.01s/Krpm	0～20000	80
A3.32	Rigid tapping deceleration time	Set speed loop deceleration time with analog rigid tapping	0.01s/Krpm	0～20000	80
A3.33	Proportional gain for rigid tapping speed loop	Set the proportional gain Kp of the speed loop for analog/pulse rigid tapping. The larger the value, the higher the gain and the greater the rigidity. Try to set a larger value under the condition that the system does not produce oscillation.	—	0～65535	100
A3.34	Integral time of rigid tapping speed loop	Set the speed loop speed integral time constant Ti for analog/pulse rigid tapping. The smaller the value, the greater the rigidity.	—	0～65535	40

6.3.3 Acceleration and deceleration control curve

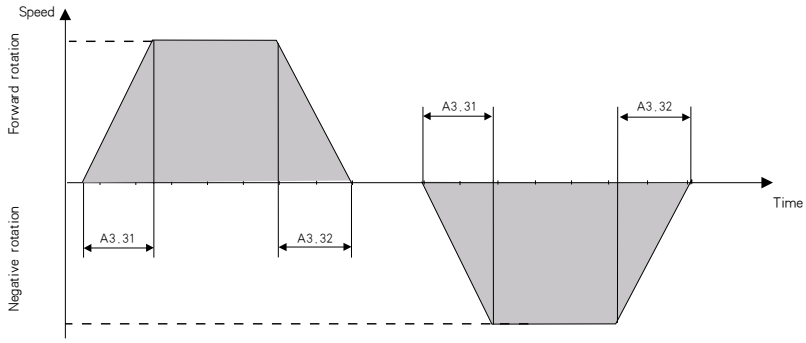

6.4 Pulse Rigid Tapping / Pulse Position

6.4.1 Port definitions and functional parameters

Orthogonal pulse rigid tapping

Definition	Signal	Function	Relevant Parameters to be Modified
Enable control	I4	Forward and reverse enable (forward and reverse determined by pulse direction)	A2.19=1
Pulse import port	PA+	A-phase input of orthogonal pulse	A2.17=1 A2.16=15
	PA-		
	DB+	B-phase input of orthogonal pulse	
	DB-		
	I11	A-phase input for 24V high-speed pulse	A2.17=2 A2.16=15
	I12	B-phase input for 24V high-speed pulse	
	SA+	A-phase input of orthogonal pulse	A2.17=0 A2.16=15
	SA-		
	PB+	B-phase input of orthogonal pulse	
	PB-		

Direction + Impulse Rigid Tapping

Definition	Signal	Function	Relevant Parameters to be Modified
Enable control	I4	Forward and reverse enable (forward and reverse determined by pulse direction)	A2.19=1
Pulse import port	PA+	Pulse signal	A2.17=1 A2.16=1
	PA-		
	DB+	Directional signal	
	DB-		
	I11	24V high-speed pulse signal	A2.17=2 A2.16=1
	I12	24V high-speed directional signal	
	SA+	Pulse signal	A2.17=0 A2.16=1
	SA-		
	PB+	Directional signal	
	PB-		

6.4.2 Parameters related to Pulse rigid tapping / pulse position

Function Code	Name	Description	Unit	Range	Default Settings
A3.33	Proportional gain for rigid tapping speed loop	Set the proportional gain Kp of the speed loop for analog/pulse rigid tapping. The larger the value, the higher the gain and the greater the rigidity. Try to set a larger value under the condition that the system does not produce oscillation.	—	0～65535	100
A3.34	Integral time of rigid tapping speed loop	Set the speed loop speed integral time constant Ti for analog/pulse rigid tapping. The smaller the value, the greater the rigidity.	—	0～65535	40
A3.35	Proportional gain for rigid tapping position loop	Set the proportional gain of the position loop during pulse rigid tapping Kp. The larger the value, the faster the response to position commands and the greater the rigidity, while excessive values tend to cause vibration. The smaller the value, the slower the response and the larger the following error.	—	0～65535	200
A3.36	Rigid tapping position loop feedforward	Setting the position loop speed feedforward Kw for pulse rigid tapping	—	0～65535	0

6.4.3 Pulse control sequence diagram

The single pulse control interface is shown in the table below and the control timing is shown on the right.

Control terminal	Function
SA+	PULSE+
SA-	PULSE-
PB+	DIR+
PB-	DIR-

Pulse interface between CNC system and GHX

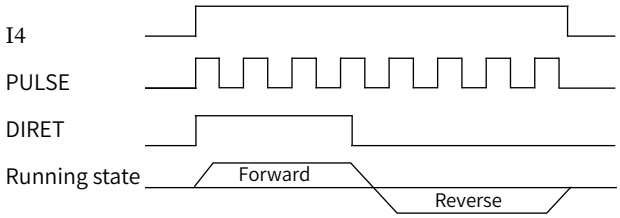

Sequence diagram for single pulse input

The dual-pulse control interface is shown in the table below, and the control timing is shown on the right.

Control terminal	Function
SA+	PA+
SA-	PA-
PB+	PB+
PB-	PB-

Pulse interface between CNC system and GHX

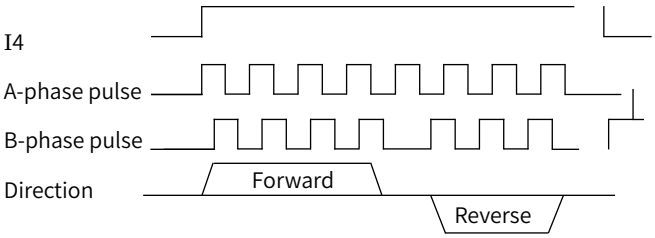

Sequence diagram for dual-pulse input

6.5 Directed Stop

6.5.1 Port definitions and functional parameters

Directed Stop	Signal	Function	Relevant Parameters to be Modified
Directed stop of internal encoder	I3	Directed Stop	A2.03=0
Directed stop of external encoder	I3	Directed Stop	A2.03=1
Second directed stop	I3	Directed Stop	A2.03=0/1/2
	I5	Proximity switch input point	
	I9	Sign for second directed stop	
Directed stop of proximity switch	I3	Directed Stop	A2.03=2 A2.30=5
	I5	Proximity switch input point	

6.5.2 Parameters related to directed stop

Function Code	Name	Description	Unit	Range	Default Settings
A3.38	First directed stop offset	Set the number of pulses for the first directed stop position	pulse	0～65535	0
A3.40	Directed stop speed	Set the max. speed for seeking encoder Z-phase pulses or proximity switch signals during directed stop	rpm	0～30000	100
A3.42	Directed stop acceleration time	Set the speed loop acceleration time for directed stop positioning	0.01s/Krpm	0～20000	60
A3.43	Directed stop deceleration time	Set the speed loop deceleration time for directed stop positioning	0.01s/Krpm	0～20000	60
A3.44	Proportional gain of directed stop speed loop	Set the speed loop proportional gain Kp at directed stop. The larger the value, the higher the gain and the higher the rigidity.	—	0～65535	100
A3.45	Directed stop speed loop integral time	Set the speed loop speed integral time constant Ti at directed stop. The smaller the value, the faster the integral speed and the greater the rigidity.	—	0～65535	40
A3.46	First gain of directed stop positioning	Set the proportional gain of first position loop of directed stop	—	0～60000	800
A3.47	Second gain of directed stop positioning	Set the proportional gain of second position loop at directed stop. The value should generally be less than the first gain at directed stop.	—	0～60000	300
A3.48	Switching threshold for directed stop gain	First gain and second gain switching threshold for directed stop positioning. Switching the second positioning gain when the remaining distance is less than this set value, otherwise the first positioning gain is used.	0.01R	0～10	1
A3.49	Second directed stop position	Set the number of pulses for the second directed stop position	pulse	0～65535	1000

6.5.3 Directed stop process curve

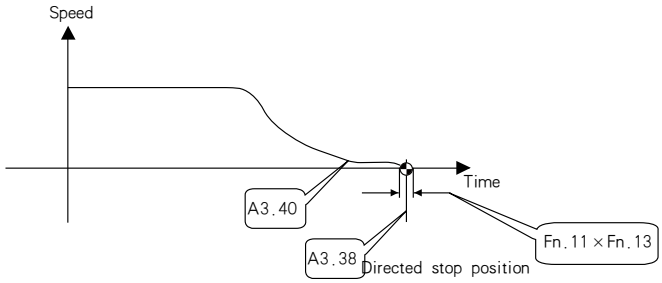

6.5.4 Directed stop sequence diagram

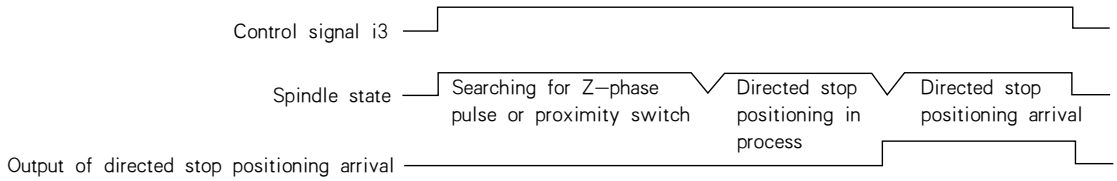

6.5.5 Directed stop of proximity switch

The directed stop of the proximity switch is a positioning method when the spindle motor and the spindle do not rotate 1:1 and an external encoder cannot be installed due to the mechanical structure. It is recommended to adopt boss induction, whose proximity switch control time sequence is shown in the figure below.

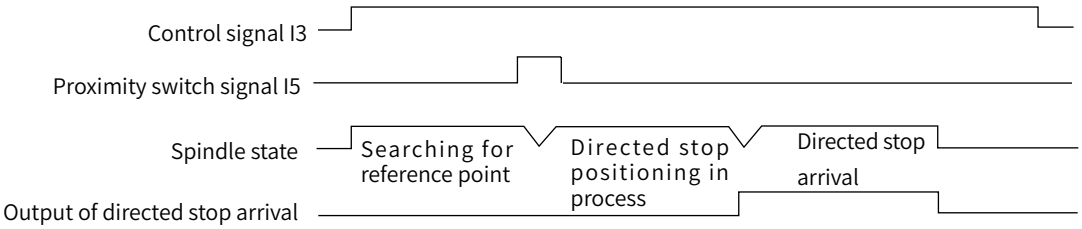

6.5.6 Second directed stop

The second directed stop is used where the user needs to use the second fixed point for positioning.

Note: When the second directed stop is used, the function of I9 will change to the selection signal for the first and second directed stop signs.

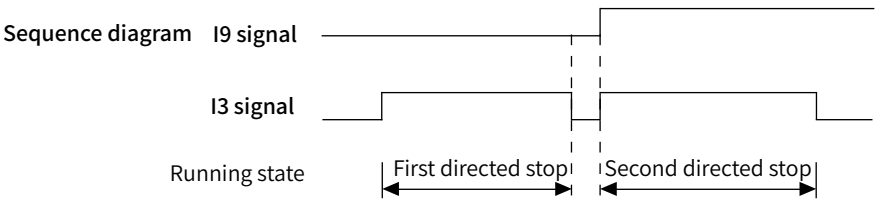

6.6 Swing

6.6.1 Port definitions

Port	Function
I6	Swing is used for automatic shifting of mechanical gears in the spindle system

6.6.2 Swing-related parameters

Function Code	Name	Description	Unit	Range	Default Settings
A3.51	Upper limit of swing speed	Set the upper limit of swing speed	rpm	0～60000	100
A3.52	Forward swing range	Set the forward swing range	0.01°	0～36000	6000
A3.53	Reverse swing range	Set the reverse swing range	0.01°	0～36000	6000
A3.54	Swing acceleration	Set the speed loop acceleration time at swing	0.01s/Krpm	0～30000	200
A3.55	Swing deceleration	Set the speed loop deceleration time at swing	0.01s/Krpm	0～30000	200
A3.56	Swinging current	Set the max. torque current for swing output and set the percentage of rated motor current to Dn.01 x A3.56/100.	%	0～1000	10
A3.57	First gain of swing	Set the proportional gain of first position loop of the swing	—	0～60000	300
A3.58	Second gain of swing	Set the proportional gain of second position loop of the swing. This value should generally be less than the first positioning gain.	—	0～60000	100
A3.59	Switching threshold for swing gain	Switching threshold for first and second gains of swing positioning. The second positioning gain is switched when the remaining distance is less than this set value, otherwise the first positioning gain is used.	0.01R	0～10	5

6.6.3 Swing process curve

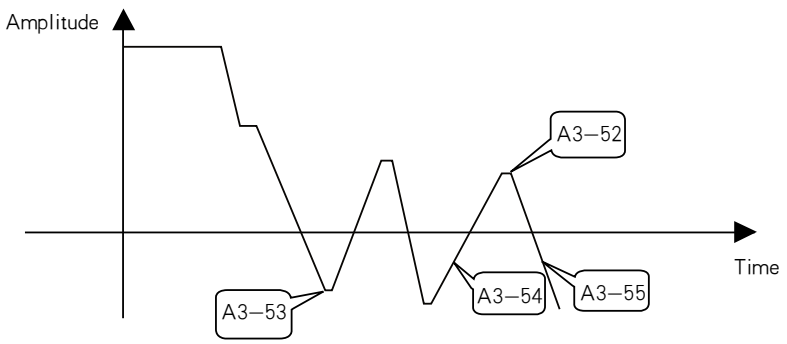

6.7 Operator Panel Operation

The operation is as follows:

1.It is necessary to modify the parameters A1.02=1 and A1.03=0.

2.Press the ENTER key on the operation panel under F. 0 menu to enter the numerical value input state. Then use the ∧ and ≫ keys on the panel to input the speed to be run, and press the ENTER key again, and then press the ≫ key to start the motor running.

3.Press the ≫ key again to decelerate the motor and stop it.

Step 2 can be repeated at any time during motor operation to change the motor running speed. If it is necessary to change the motor running direction during operation, this can be realized by setting Cn.00.

⚠ Caution

The operating panel is only a simple operating mode and is generally only used as a test. It is recommended that the speed of the motor should not be set too high when the operation panel is running. After the test of operation panel running is completed, it is necessary to change the parameters back to the default values as A1.02=0 and A1.03=0.

6.8 modbus Communication Settings

6.8.1 Parameters related to 485 communication settings

Function code	Name	Description	Unit	Parameter range	Initial value
Bn.00	modbus station number	Modbus slave station number setting	—	0～255	1
Bn.01	Baud rate of modbus communication	0：9600 1：19200 2：38400 3：57600 4：115200	—	0～4	1
Bn.02	modbus parity check	0: no check 1: even parity 2: Odd parity	—	0～2	0
Bn.03	modbus high and low byte selection	0: low first 1: high first	—	0、1	0
Bn.04	485 termination resistor selection	0: inactive 1: active	—	0、1	0
Bn.05	Modbus-TCP IP address	Modbus-TCP IP address setting, 192.168.a.b, Bn.05 as a x 256 + b	—	0～65535	0

Note: Power down and restart the driver is required after modifying the selection of modbus 485 communication checksum.

6.9 Star/delta conversion

For special needs in machining, it is sometimes necessary to have not only a high rotational speed of the motor spindle, but also a strong torque characteristics in the low-speed zone. In order to meet the demand, the star/delta conversion of the spindle coil is required during operation. Most star/delta conversion devices consist of a combination of a contactor and a relay, and usually the star/delta conversion device is provided by the user. The star/delta conversion action should be controlled by the upper computer system, which must follow the principle of "switching at zero motor speed and Interrupt Enable". It is necessary to send commands to Enable and Speed after the switching is completed, and switching with Enabled is absolutely not permitted.

◆ Control for star/delta conversion

Winding switching is controlled by the upper system, which is controlled by simulating mechanical shift with the system. The control signal of switching output is issued by the upper system through PLC, and the state signal of switching action is fed back to the upper position through PLC.

Wiring principle for control

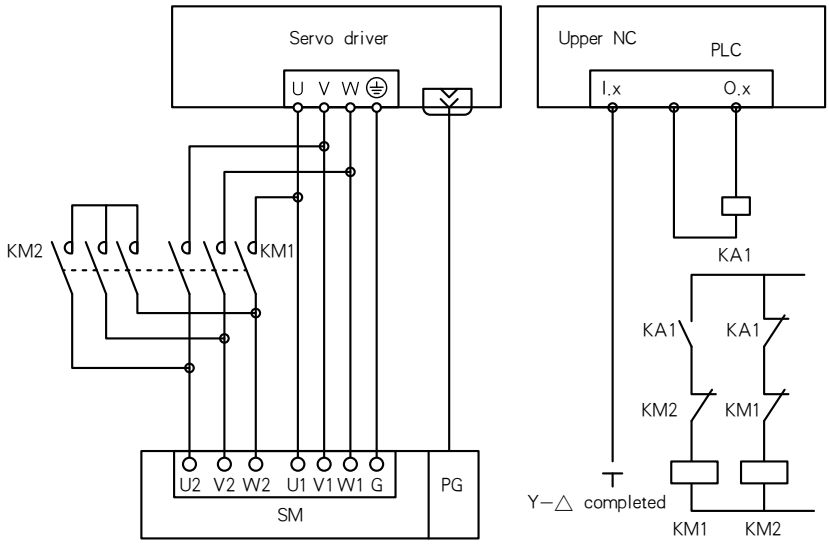

Functional Flowchart

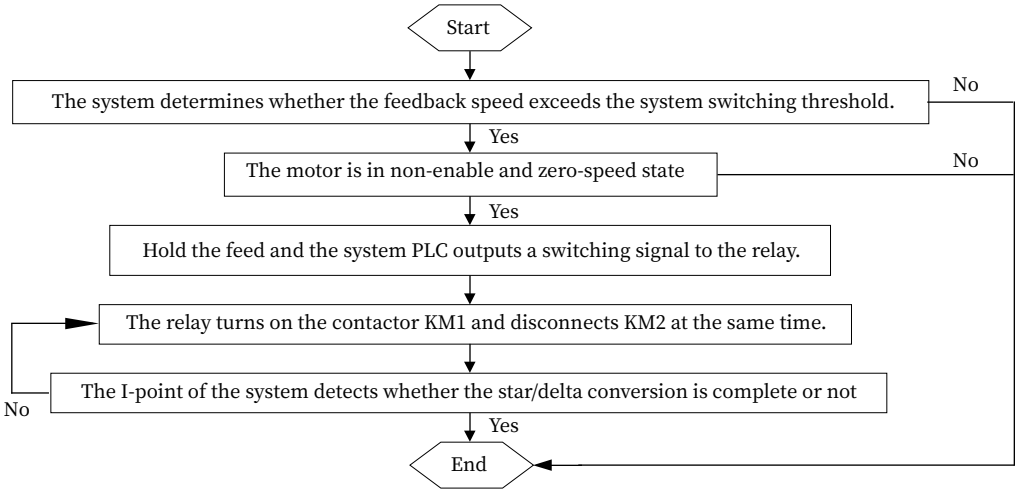

Relevant parameters

Function code	Name	Description	Unit	Parameter range	Initial value
Fn.21	Star/delta conversion mode	0: no conversion 1: Auto; convert automatically according to the feedback speed, output multi-function output points, and enable according to the delay time. 2: Manual; convert by multi-function DI points, and enable according to the delay time 3: Automatic; convert automatically according to the feedback speed, output multi-function output points, and feedback the multi-function DI as contactor contact to the Enable 4: Manual; convert by multi-function DI points and feedback multi-function DI as contactor contact to Enable	—	0～4	1
Fn.22	Star/ delta conversion speed	Convert to delta connection when the actual speed exceeds this preset value, otherwise star connection shall be used.	rpm	0～30000	3000
Fn.23	Tolerance of star/ delta conversion speed	The dead zone range for star/delta conversion, i.e., delta connection when SPD>(Fn.22+Fn.23), star connection when SPD<(Fn.22-Fn.23), and the previous state in all other cases.	rpm	0～30000	100
Fn.24	Star/delta conversion time	This parameter determines the Switch Enable time	ms	0～3000	1000
Dn.01	Rated current of the first motor	First motor rated current settings	A	0～6000.0	11.5
Dn.02	Rated speed of the first motor	First motor rated speed settings	rpm	0～60000	1500
Dn.03	Rated voltage of the first motor	First motor rated voltage settings	V	0～20000	380
Dn.04	Rated power of the first motor	First motor rated power settings	KW	0～6000.0	5.5
Dn.05	Power factor of the first motor	First motor power factor settings	—	0～1.00	0.86
Dn.06	Rated frequency of the first motor	First motor rated frequency settings	HZ	0～6000.0	50.8
Dn.07	Rated torque of the first motor	First motor rated torque settings	Nm	0～60000	35
Dn.08	Number of pole pairs of first motor	First motor pole pair settings	pairs	0～10000	2
Dn.09	Max. output speed of the first motor	First motor max. output speed settings	rpm	0～60000	3000
Dn.21	Constant-power max. speed of the first motor	Constant-power max. speed settings for the first motor	rpm	0～60000	1500
Cn.16	Scale parameter for motor 1 current loop	Current loop scale parameter Kp settings	—	0～30000	100
Cn.17	Current loop integral time constant for motor 1	Current loop integral time constant Ti settings	—	0～300.00	4
Dn.25	Rated current of the second motor	Second motor rated current settings	A	0～6000.0	11.5
Dn.26	Rated speed of the second motor	Second motor rated speed settings	rpm	0～60000	1500
Dn.27	Rated voltage of the second motor	Second motor rated voltage settings	V	0～20000	380
Dn.28	Rated power of the second motor	Second motor rated power settings	KW	0～6000.0	5.5
Dn.29	Power factor of the second motor	Second motor power factor settings	—	0～1.00	0.86
Dn.30	Rated frequency of the second motor	Second motor rated frequency settings	HZ	0～6000.0	50.8

Function code	Name	Description	Unit	Parameter range	Initial value
Dn.31	Rated torque of the second motor	Second motor rated torque settings	N.M	0～60000	35
Dn.32	Number of pole pairs of second motor	Second motor pole pair settings	pairs	0～10000	2
Dn.33	Max. output speed of the second motor	Second motor max. output speed settings	rpm	0～60000	8000
Dn.45	Constant-power max. speed of the second motor	Constant-power max. speed settings for the second motor	rpm	0～60000	1500
Cn.37	Proportional gain for motor 2 current loop	Current loop proportional gain Kp settings	—	0～30000	100
Cn.38	Current loop integral time constant for motor 2	Current loop integral time constant Ti settings	—	0～300.00	4

6.10 S-curve

6.10.1 S-curve-related parameters

Function code	Name	Description	Unit	Parameter range	Initial value
Cn.03	Acceleration onset S-curve time	Acceleration onset S-curve time settings	ms	0～2000	0
Cn.04	Acceleration end S-curve time	Acceleration end S-curve time settings	ms	0～2000	0
Cn.05	Deceleration onset S-curve time	Deceleration onset S-curve time settings	ms	0～2000	0
Cn.06	Deceleration end S-curve time	Deceleration end S-curve time settings	ms	0～2000	0

6.10.2 SDescriptions of S-curve

This module travels the preset S speed curve according to the preset parameters; this module is based on the T-curve, and the part outside the S-curve travels the T-curve;

The S-curve is divided into four stages, which are defined as A, B, C and D. A is the acceleration stage, which corresponds to the parameter Cn.03; B is the acceleration stage, which corresponds to the parameter Cn.04; C is the deceleration stage, which corresponds to the parameter Cn.05; and D is the deceleration stage, which corresponds to the parameter Cn.06; the S-curve times of the four stages can be set individually (set through Cn.03 to Cn.06);

The principle is to make the acceleration and deceleration into a T-curve, not a rectangular curve, where the speed is obtained as an S-curve;

6.10.2 S-curve diagram

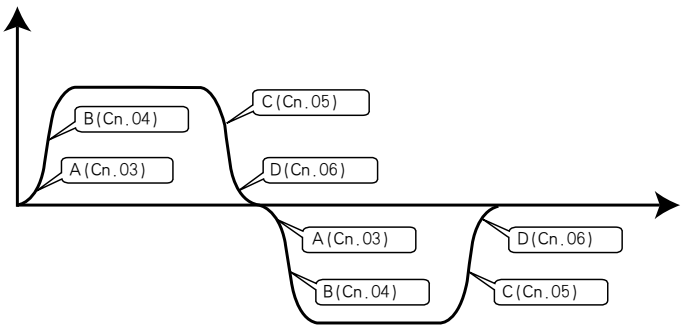

6.11 Fieldbus Applications

According to different bus types and the corresponding parameters set by the upper computer, the bus related parameters are as follows:

Function code	Name	Description	Unit	Parameter range	Initial value
A1.02	Command mode selection	0: Terminal operation mode 1: Panel operation mode 2: Fieldbus mode 3: Multi-function logic DI mode	—	0～3	2
Bn.06	High-speed fieldbus selection	0：EtherCAT 1：Profinet 2：Powerlink 3：Ethernet-IP 4：Mechatrolink II 5：Mechatrolink III 6：Profibus	—	0～6	4
Bn.07	Profinet MAC address	Profinet MAC address settings	—	1～255	1
Bn.08	Powerlink station number	Powerlink bus slave station number settings	—	1～239	1
Bn.09	Ethernet-IP station number	Ethernet-IP slave station number settings	—	0～255	1
Bn.10	Mechatrolink II station number	Mechatrolink II slave station number settings	—	0～255	4
Bn.11	Mechatrolink III station number	Mechatrolink III slave station number settings	—	0～255	4
Bn.12	Mechatrolink III expansion station number	Mechatrolink III expansion station number	—	0～255	48
Bn.13	Bus interpolation cycle settings	Bus cycle time	ms	0～65535	3
Bn.14	Bus domain time parameter settings	Disconnection is considered when the bus communication is disconnected for longer than this preset.	ms	0～65535	200
Bn.15	Bus interrupt cycle	Bus interrupt cycle (automatically obtained from the bus)	us	0～65535	1
Bn.16	Numerator L for bus speed gear ratio	Numerator of bus speed command gear ratio	—	1～4294967296	1
Bn.17	Numerator H for bus speed gear ratios				
Bn.18	Denominator L for bus speed gear ratio	Denominator of bus speed command gear ratio	—	1～4294967296	1
Bn.19	Denominator H for bus speed gear ratios				

Function code	Name	Description	Unit	Parameter range	Initial value
Bn.20	Mechatrolink bus host station selection	0: Syntec CNC system 1: LNC CNC system 2: KND CNC system 3: LYNUC CNC system 4: Lantian CNC system 5: HUST CNC system 6: Keyence controller	—	0～6	0
Bn.21	EtherCAT bus host station selection	0: Beckhoff controller 1: i5 CNC system 2: CPTEK controller	—	0～2	0
Bn.22	Profibus slave station number	Profibus slave station number settings	—	1～255	1

D18 DRIVER

7 Troubleshooting

This section describes common driver faults and solutions.

List of Fault Alarms and Solutions.....7-2
Analysis of Common Faults.....7-5
Reset Methods for Alarms.....7-9

List of Fault Alarms and Solutions

When an abnormality occurs in the driver, the protection function acts, with the LED digital tube displaying the fault message, and the fault output relay acting to stop the driver from outputting.
The fault contents and solutions of the D18 driver are shown in Table 7-1.
Please contact the manufacturer when technical support is required.

Table 7-1 Alarm Contents and Solutions

Fault Code	Fault Name	Possible Causes	Solutions
E.PLC	Frequent storage alarm	Frequent storage alarm triggered by A1.13	Check if the PLC program frequently triggers storage
E.ou	Overvoltage	The bus voltage is detected over the upper limit of the threshold value (Pn.00), which can be reset	● Check that the braking resistor is properly set. ● Reduce the acceleration and deceleration speed ● Check that the inlet RST AC voltage is normal. ● Observe the bus voltage (U.0 or U1.05). ● This alarm cannot be shielded.
E.Uu	Undervoltage	The bus voltage is detected less than the lower limit of the threshold value (Pn.01), which can be reset	● Check that the inlet RST AC voltage is normal. ● Observe the bus voltage (U.0 or U1.05). ● This alarm cannot be shielded.
E1. oc	Overcurrent	The driver 316J is detected with a high current signal, which is passed to the CPU via an IO point and is not resettable	● Power down and test the driver module ● Check if the motor parameters are set incorrectly ● Observe the current during operation (A. 0 or U1.03). ● This alarm cannot be shielded.
E1. oc2	Overcurrent	● It will alarm if the present current exceeds the rated current of the driver by 1.1 times, is less than the set current of the alarm point by 1.3 times and the state lasts for 60 minutes, which can be reset. ● It will alarm if the present current exceeds the rated current of the driver by 1.3 times, is less than the set current of the alarm point by 1.5 times and the state lasts for 30 minutes, which can be reset. ● It will alarm if the present current exceeds the rated current of the driver by 1.5 times, is less than the set current of the alarm point by 1.6 times and the state lasts for 15 minutes, which can be reset. ● It will alarm if the present current exceeds the rated current of the driver by 1.6 times, is less than the set current of the alarm point by 1.7 times and the state lasts for 7.5 minutes, which can be reset. ● It will alarm if the present current exceeds the rated current of the driver by 1.7 times, is less than the set current of the alarm point by 1.8 times and the state lasts for 5 minutes, which can be reset. ● It will alarm if the present current exceeds the rated current of the driver by 1.8 times, is less than the set current of the alarm point by 1.9 times and the state lasts for 3 minutes, which can be reset.	● Power down and test the driver module ● Check if the motor parameters are set incorrectly ● Observe the current during operation (A. 0 or U1.03). ● This alarm cannot be shielded.

Fault Code	Fault Name	Possible Causes	Solutions
E1. oc2	Overcurrent	● It will alarm if the present current exceeds the rated current of the driver by 1.9 times, is less than the set current of the alarm point by 2 times and the state lasts for 1 minute, which can be reset. ● It will alarm if the present current exceeds the rated current of the driver by 2 times and the state lasts for 30 seconds, which can be reset.	● Power down and test the driver module ● Check if the motor parameters are set incorrectly ● Observe the current during operation (A. 0 or U1.03). ● This alarm cannot be shielded.
E1. oc3	Overcurrent	Hall sampling reaches Hall rated current, which can be reset	● Power down and test the driver module ● Check if the motor parameters are set incorrectly ● Observe the current during operation (A. 0 or U1.03). ● This alarm cannot be shielded.
E1. oc5	Overcurrent	It alarms when the sum of three-phase currents is not 0, which is only for drivers of 30kw and above.	● Observe the current during operation (A. 0 or U1.03) ● Hall faults ● This alarm can be shielded by Pn.60.
E1. oH1	High module temperature	It is detected by the temperature module AD; if the actual temperature exceeds 90 degrees, it will alarm, which can be reset	● Observe the current during operation (A.0 or U1.03). ● Observe the actual module temperature (U2.23). ● This alarm cannot be shielded.
E1. oH3	Motor overheat	It is judged by the state of the input points provided to the CPU through the thermal switch in the motor, which can be reset	● Check whether the motor fan works properly. ● Check whether the normally on and off of alarm parameter (Pn.50) for motor overheating is set incorrectly. ● Shield the alarm with Pn.10=2.
E1. oH4	Motor overheat	The alarm is detected by a second motor temperature detection device, which can be reset	● Check whether the motor fan works properly. ● Check whether the second motor temperature (Pn.51) display is normal. ● Shield the alarm with Pn.10=9.
E1. oH5	Motor overheat	The alarm is detected by a third motor temperature detection device, which can be reset	● Check whether the motor fan works properly. ● Check whether the second motor temperature (Pn.52) display is normal. ● Shield the alarm with Pn.10=9.
E1. oH6	Motor overheat	The alarm is detected by a fourth motor temperature detection device, which can be reset	● Check whether the motor fan works properly. ● Check whether the second motor temperature (Pn.53) display is normal. ● Shield the alarm with Pn.10=9.
E1. EL	Broken encoder wire	Continuous error in the CRC check of the encoder communication or continuous occurrence of the encoder's own alarm codes, which can be reset	● Check whether the driver and motor encoder interfaces are plugged in properly. ● Check whether the motor encoder card is abnormal ● Check the parameters (Pn.06 and Pn.07) to help find the cause. ● This alarm cannot be shielded.

Fault Code	Fault Name	Possible Causes	Solutions
E1. EL2	Broken wire in second encoder	Continuous error in the CRC check of the second encoder communication or continuous occurrence of the encoder's own alarm codes, which can be reset; It is active only when the function of second encoder is enabled	● Check whether the driver and second encoder interfaces are plugged in properly. ● Check whether the second encoder card is abnormal ● Check the parameters (Pn.06 and Pn.07) to help find the cause. ● This alarm cannot be shielded.
E1. EC	Z-signal fault in the encoder	Accumulate the encoder count continuously and clear this accumulated value to zero when it encounters a zero signal; if this accumulated value exceeds the set theoretical count of one turn of the encoder by 2 times and occurs twice in a row, it will alarm, which can be reset;	● Check whether the driver and motor encoder interfaces are plugged in properly ● Check if the z signal of the encoder is normal ● Check if the encoder resolution is incorrectly configured ● Shield this alarm by Pn.04=0.
E1. EC2	Z-signal fault in the second encoder	Accumulate the second encoder count continuously and clear this accumulated value to zero when it encounters a zero signal; if this accumulated value exceeds the set theoretical count of one turn of the encoder by 2 times and occurs twice in a row, it will alarm, which can be reset;	● Check whether the driver and second encoder interfaces are plugged in properly ● Check if the z signal of the second encoder is normal ● Check if the resolution of second encoder is incorrectly configured ● Shield this alarm by Pn.35=0.
E1. AD	ADC alarm	CPU running abnormally	contact manufacturer
E1. ES	Magnetic pole identification timeout	Magnetic pole identification over 15s	● Learning fails due to excessive motor resistance, which can be learned by lowering the rated motor current. ● Check the power cable of the motor.
E1. ES2	1pp auto-calibration of second encoder failed	The auto-calibration of the second encoder 1vpp fails	● Whether the motor itself can operate normally ● Damage to the second encoder head Damage to the gear disk
E1. EA	1VPP amplitude error	It alarms when 1vpp encoder amplitude is abnormal	● Improper mounting position of the encoder head ● Damage to the encoder head ● Damage to the gear disk
E1. EA2	1VPP amplitude error of second encoder	It alarms when 1vpp encoder amplitude of second encoder is abnormal	● Improper mounting position of the second encoder head ● Damage to the second encoder head ● Damage to the gear disk
E1. oP	Following error out-of-tolerance	It alarms if the actual following error exceeds the alarm threshold of following error (Pn.16) for 50ms, which can be reset.	● Check whether the following error thresholds (Pn.16) are inappropriate. ● Check the rigidity parameters of the position loop and speed loop. ● Shield this alarm by Pn.16=0.
E1. SE	Stall alarm	If the difference between the output speed and the feedback speed is greater than the stall alarm threshold (Pn.14) and lasts for the alarm window time (Pn.15), then an alarm will be raised, which can be reset	● Check that the alarm thresholds (Pn.14, Pn.15) for speed error are appropriate. ● Check the rigidity parameter of the speed loop. ● Check whether the encoder is abnormal ● Shield this alarm by Pn.14=0 and Pn.15=0.

Fault Code	Fault Name	Possible Causes	Solutions
E1. rA	Hall anomaly	Detect the Hall acquisition midpoint value when the driver is powered up and after the AD initialization is complete. If this value differs from the theoretical midpoint value by 600 digits, i.e. 0.5V, an alarm will be raised, which can be reset.	● Check whether the Hall sampling values (Sn.19 and Sn.20) are in the vicinity of 2048. ● Check whether the interface between the control board and the main circuit is not properly connected. ● Check whether the Hall element of the main circuit unit is normal. ● This alarm cannot be shielded.
E1. FE	High CPU utilization	It alarms when the utilization rate of the motor control program exceeds 90% or more, which can be reset.	● Check whether the parameters of the carrier frequency are set properly (Sn.06) ● This alarm cannot be shielded.
E1. bA	Long brake-on time	It alarms when the brake-on time exceeds the preset time (PN.68)	● The parameters for the deceleration time are set too long. ● The parameter Pn.68 can be released appropriately according to the site conditions.
E1. CPU	Large CPU running error	This function allows the small cpu to detect according to the heartbeat of the large cpu; if the heartbeat is abnormal, then disconnect the PWM wave immediately	● As a result of plugging and unplugging the serial port with power ● High cpu utilization due to particularly frequent signals in the direction of the pulse port
E1. dd	Small CPU faults	It is judged by detecting the heartbeat of the small CPU; if the heartbeat of the small CPU disappears and lasts 50ms, it will alarm, which can be reset.	● Check whether the version number of the small CPU (Sn.08) is correct. This alarm cannot be shielded.
E1. LoP	Output out-of-phase detection	Output out-of-phase or current feedback device anomaly is detected	● Check for abnormalities in the power cord of the motor ● Check for abnormal Hall wires in the driver ● Check for damage to the output optocoupler of the driver. ● This alarm is raised by the units bit of Pn.69.
E1. oS	Overspeed alarm	If the actual speed exceeds the overspeed alarm threshold (Pn.13) for 40ms, the alarm will be raised; if this parameter is set to 0, the alarm OS will be raised directly, which can be reset.	● Check whether the overspeed alarm threshold (Pn.13) is not set appropriately. ● Check the encoder cables ● Check the motor parameters This alarm cannot be shielded.
E1. EP	Encoder battery alarm	It's the Tamagawa 8401/8501 battery alarm, which can be reset; as zero-point can be lost, it is necessary to recalibrate the zero-point when a battery alarm occurs.	● Check the encoder cables ● Check battery voltage ● The alarm can be shielded by P1.05=0.
E1. EE	Chassis EE read failed	● This alarm is detected only once from power up ● Read the power code from the driver EE; if this power code is not in the driver' s power code list, it will alarm, which can be reset	● Set by power code parameters (Sn.01) ● This alarm cannot be shielded.
E1. PA	Initialization of smart card parameters failed	Reading parameters from smart card failed; detected once after power up	● Check whether the smart card is connected ● Whether the En.19 smart card is selected correctly ● Whether the encoder cables are abnormal

Fault Code	Fault Name	Possible Causes	Solutions
E1. uC	No contactor engagement in the main circuit	Low voltage or faulty contactor on the driver above 22KW	● Check the inlet voltage or contactor
E1. oL	Motor overload	● It will alarm if the current reaches 115% of the motor’s rated current and lasts for 80 minutes. ● It will alarm if the current reaches 125% of the motor’s rated current and lasts for 40 minutes. ● It will alarm if the current reaches 135% of the motor’s rated current and lasts for 15 minutes. ● It will alarm if the current reaches 145% of the motor’s rated current and lasts for 6 minutes. ● It will alarm if the current reaches 155% of the motor’s rated current and lasts for 4 minutes. ● It will alarm if the current reaches 165% of the motor’s rated current and lasts for 2.5 minutes. ● It will alarm if the current reaches 175% of the motor’s rated current and lasts for 2 minutes. ● It will alarm if the current reaches 185% of the motor’s rated current and lasts for 1.5 minutes. ● It will alarm if the current reaches 195% of the motor’s rated current and lasts for 1 minute. ● It will alarm if the current reaches 225% of the motor’s rated current and lasts for 30 seconds. ● It will alarm if the current reaches 245% of the motor’s rated current and lasts for 10 seconds. ● The alarm curve can be adjusted via the gain parameter (Pn.21)	● Check the parameters for overload gain (Pn.21) ● Check whether the motor parameters are set incorrectly. ● Observe the current during operation (A.0 or U1.03). ● This alarm cannot be shielded.
E1. oL2	Low-speed motor overload	When the actual motor speed is lower than the alarm speed threshold for low-speed overload (P1.18), and the actual current exceeds the current calculated by the low-speed overload multiplier (P1.20) and lasts for the low-speed overload time (P1.19), then the alarm will be raised, which can be reset.	● Check if the overload time is too less ● Check if the motor parameters are set incorrectly. ● Observe the current during operation (A.0 or U1.03). ● If one of Pn.18, Pn.19, or Pn.20 is 0, an alarm is raised. ● This alarm cannot be shielded.
E1.SrY	Identification error of motor parameters	Failure alarm in identification of resistive and inductive parameters of the motor	● Check the set rated parameters of the motor. ● Check the motor wiring ● Check whether the Hall information of the driver is correct
E1. oP2	The deviation inside and outside the full closed-loop is too large	● Mechanical transmission slipping causes ● Abnormal resolution setting of external encoder ● Abnormal external encoder count	● Check if the mechanical transmission slips back ● Is the external encoder counting normal ● Check if the Pn39 and Pn40 parameters are set properly

Analysis of Common Faults

When the system starts up, the driver and motor fail to act according to the design requirements due to parameter settings or wiring errors, etc.; since there is no alarm code output from the driver, please refer to this item for appropriate treatment.

■ No display on driver power-up

Phenomenon: There is no display on the controller after the driver is powered on; there are more causes for this fault, which need to be checked carefully; please remove all control lines before testing.

Causes: Failure of the driver’s rectifier bridge, inverter bridge, switching power supply or starting resistor.

◆ Detect the main circuit’s indicator

If the indicator is on, the rectifier bridge and charging resistor is normal; then it should be the failure of the switching power supply, please ask the manufacturer or professional for repair;

If the indicator is not on, carry out the next test.

◆ Detect whether the input power of the driver is normal

Measure the three-phase AC voltage on the R/S/T terminals of the driver with a multimeter to see if it is normal; normal power supply: 330V < power supply < 440V.

If no voltage, the power supply fails;

If normal, proceed to the next test.

◆ Detect the rectifier bridge

Measure the rectifier bridge with a multimeter, and see the Maintenance Manual for CTB products for more details on the methods.

If the rectifier bridge is normal, then the charging resistor is burned out; please ask the manufacturer or a professional for repair;

If the rectifier bridge is damaged, replace the rectifier bridge; it is recommended to be repaired by the manufacturer.

■ Fail to run

Phenomenon: The driver displays F.0 when it is powered on, and it does not rotate when the CNC system sends the running command.

Causes: Failure of the CNC system to send frequency commands or running commands, control logic errors, improper parameter settings and other reasons may lead to non-rotation, which need to be carefully checked.

◆ Detect the set speed value on the driver, i.e. the displayed value of F

Enable the CNC system to execute S1000 M3 and observe if the display on the driver reads F. 1000.

If yes, test the output frequency U1.01 of the driver and the feedback frequency U1.02;

If not, detect whether the CNC system correctly sends the frequency commands and the run commands.

◆ Detect the output frequency O and feedback frequency b of the driver

IF U1.01 IS CONSISTENT WITH U1.00 AND U1.02 IS 0, TEST THE MOTOR AND WIRING AND CONTACT THE MANUFACTURER OR PROFESSIONALS FOR REPAIR;

IF U1.01 IS INCONSISTENT WITH U1.00 OR IS 0, CHECK ACCELERATION PARAMETER A3.24 OR CONTACT THE MANUFACTURER.

◆ Detect whether the CNC system correctly sends frequency commands and running commands

Monitor the analog input value U2.06 or U2.07 and the switching input state U2.03 with the monitoring parameters of U2. If normal, the analog value is approximately 100% (up to 8,000 rpm) and the rest of the switching input signals are 0.

Step 1: Use a multimeter to test the corresponding analog on the driver terminals to see if it is correct; if not, test the system and connect the cables; perform the next step correctly.

Step 2: Monitor the analog input value U2.06 or U2.07 (select which analog is to be monitored according to the specific program); if 100% is displayed, test whether the relevant parameter (A2.01) of the analog input port selection is correct; if it cannot be solved, contact the manufacturer; if the display is not 100%, proceed to the next step.
Step 3: Re-calibrate the analog, and see Chapter 6 for details. Check U2.06 or U2.07 again (select which analog to monitor according to the specific program); if the display is 100%: if the problem cannot be solved, contact the manufacturer; if the display is not 100%, contact the manufacturer.

◆ Measure the command signals from the CNC system

If normal, it means that there is a signal reception error of the driver’s control board, please replace the control board or contact the manufacturer for repair.
If abnormal, please test the wires between the interface of the CNC system and the driver, and the valid level of the driver signal.

◆ Check motor and wiring

Remove the motor connecting wires from the driver, and use a megohmmeter to measure the insulation of the motor’s U, V, and W phase to ground, and then measure the resistance between the three phases with the min. ohm of the multimeter to see if the resistance is balanced, so as to determine whether the motor and the connecting wires are normal.
If normal, the driver module is burned out;
If abnormal, replace the motor or wires.

■ Low-speed run

Phenomenon: After adjusting the set speed (frequency), the set speed (frequency) display U1.00 on the controller is normal, but the speed is very low (about tens of revolutions) and does not change with the set speed.
Causes: Feedback error of motor encoder or wrong phase sequence of motor.

◆ Check the motor and encoder wiring

Normal wiring: the U/V/W of the motor is wired one-to-one with the U/V/W of the driver, with the encoder wired correctly.
If abnormal: Adjust the wiring;
If normal: detect whether the encoder lines and the number of physical lines of the encoder are consistent with E1.01 or E1.08.

◆ Detect encoder signals

Methods: Power on the driver, and measure A+ and A-, B+ and B-, Z+ and Z- on the control board of the driver with the DC 20V of the multimeter in standby mode, which is about +3V or -3V.
If abnormal: test the cables of the encoder and monitor if the U2.00 count is normal.
If normal: it indicates the encoder fails; please replace the encoder.

◆ Detect the encoder cables

Methods: Remove both ends of the encoder cables from the motor and driver respectively, and use the ohm of a multimeter to measure whether each core of the cable is conducted.
If abnormal: it indicates the cables fail; please replace the cables.
If normal: it indicates the encoder fails; please replace the encoder.

■ Incorrect speed settings

Phenomenon: The deviation between the set speed (frequency) of U1.00 on the driver and the set speed of the S command on

the CNC system is large.

Causes: Mismatch of parameter settings on the driver or CNC system, or analog interface failure.

◆ Adjust the parameter settings of the driver and CNC system

Check the relevant parameters of the driver: A2.01 Analog type, A3.23 Max. output speed

Check the relevant parameter settings of the CNC system;

Use a multimeter to check the port voltage of the analog if all settings are normal.

◆ Detect the port voltage of analog

Normal port voltage = set speed/max. speed x 10 (V)

Take the max. speed of 8000 rpm as an example, and test according to the table below, which is normal for deviation within ±0.1%.

Set speed of CNC system (rpm)		400	800	1000	2000	4000	8000
Analog port Voltage	Unipolar	0.50	1.00	1.25	2.50	5.00	10.00
	Bipolar	0.50	1.00	1.25	2.50	5.00	10.00
Set speeds displayed by the driver		400	800	1000	2000	4000	8000

If the detection value is correct: This indicates a faulty analog port on the driver; replace the control board of the driver;

If the detected value is incorrect: This indicates a faulty analog output port of the CNC system; replace the interface board of the CNC system.

■ Incorrect directed stop

Common phenomenon of incorrect directed stop:

The angle of directed stop deviates from the tool magazine when it is used for the first time or after replacing the motor or synchronous belt;

The directed stop position changes after a certain period of time;

Occasional incorrect directed stop position during use.

◆ The directed stop position changes after a certain period of time

Phenomenon: After a change in the directed stop position, the deviation stabilizes and does not recover.

Detection: whether the synchronous belt, the motor’s synchronous pulley or the motor’s encoder is loose.

Disposal: If the above phenomenon occurs, please make the appropriate maintenance; otherwise, please contact the manufacturer to replace the encoder.

◆ Occasional incorrect directed stop position during use

Please contact the manufacturer to replace the encoder after confirming the following conditions.

The cable of the encoder is connected reliably and the shield is well grounded.

The logic of the CNC system’s directed stop control program is correct.

It will still occur occasionally after a number of manual directed stops with the MDI method.

■ Asynchronous motor deceleration alarm OC3

This problem is generally considered from the following points:

The current loop is too rigid and the current loop KP (Cn.19) and current loop integral time (Cn.20) need to be adjusted;

The max. current output is inappropriate and the max. current output limit (Cn.10) needs to be adjusted;

Short circuit to ground or between turns of the motor; it is necessary to measure the motor resistance and insulation to ground.

■ Slow acceleration and deceleration of permanent magnet synchronous motors

The main points below are generally checked in this case:
Inappropriate learning angle of the motor encoder;
Inappropriate setting of the max. motor current (Cn.10);
Inappropriate motor acceleration and deceleration parameter settings (Cn.01, Cn.02);
Slow acceleration/deceleration settings on the CNC side.

■ Slow acceleration and deceleration of asynchronous motors

The main points below are generally checked in this case:
Inappropriate settings of the max. motor current (Cn.10);
Inappropriate motor acceleration and deceleration parameter settings (Cn.01, Cn.02);
Slow acceleration and deceleration settings on the CNC side;
Small configuration of motor excitation current settings (Dn.01,Dn.05);
Inaccurate magnetic field orientation (Dn.22);
The current in the high-speed section is limited (Dn.18); if this value is set too large, overcurrent is likely to occur.

■ Overvoltage alarm during deceleration

The driver displays an E1. OV or E1. Uv1 alarm
Causes: The driver’s deceleration parameters are not set properly and the driver’s braking circuit is faulty or the braking resistor is burnt out.

◆ Check the acceleration and deceleration parameters of the driver

Stop the driver, increase the set value of the parameter A3.25 by 0.5 at a time, and then re-observe. If the alarm still occurs, proceed to the next test.

◆ Detect the braking resistor

With the driver powered down, measure the resistance value at both ends of the braking resistor with the ohm of the multimeter. If the resistance value is infinite, the braking resistor is burnt; if it is consistent with the nominal value of the resistor, the braking resistor is normal.

◆ Verify the driver fault

Run the driver and measure the DC bus (between P (+) and N) voltage when the driver is decelerating with the DC 1000V of the multimeter. When the measured value has more than 750V, it proves that the braking circuit of the driver is faulty, or the external braking unit is faulty, then contact the manufacturer for repair.

■ Possible faults caused by faulty encoders

When rotating at low speed, the speed is less than 100 rpm; the operating current exceeds the rated current; the torque reaches 100%; the speed settings do not work.
When rotating at high speed (more than 3,000 rpm), the speed does not reach the settings; the torque reaches 100%.
When rotating at low speed, there is obvious mechanical noise; uneven speed; unstable running without control by the running signal.
Runaway; high speed rotation with no control by the running signal.

■ Frequent Fault E1.UV1

Causes: unstable voltage of the power supply or faulty lines of the power supply.

Checks:

Whether thunderstorms; or instantaneous undervoltage that may be caused by large equipment startups in the vicinity during the time period when the power voltage fluctuates greatly.

Poor contact of the power supply lines; carefully check whether the contacts of the circuit breakers, contactors, and fuses of the power supply lines have poor contact (which cannot be judged by measuring with a multimeter alone).

Solutions:

Install stabilized power supply in areas with unstable grid voltage.

Handle wiring faults.

Replace defective low-voltage appliances.

■ Leakage protection switch action

Phenomenon: When the servo starts, the leakage protection switch trips.

Causes: No dedicated leakage protection switch for the servo (or inverter) is selected, and the leakage protection value settings are too small.

Solutions:

For regular leakage protection switches, it is recommended to use one with a leakage protection value of 200mA, or to eliminate the leakage protection switch.

Use a dedicated leakage protection switch for the servo (or inverter) with a leakage protection value of 30mA.

Install an isolating transformer between the regular earth leakage protection switch and the AC servo driver.

Reset Methods for Alarms

There are 2 methods for alarm reset as follows:

Press the Shift key.

Disconnect the driver from power and power on again after the power indicator for the driver turns off.

D18 DRIVER

8

Maintenance and Care

This section describes the basic requirements and methods for routine maintenance and care of the driver.

Tips.....8-2
Routine Care and Maintenance.....8-2
Regular Maintenance.....8-3
Consumables.....8-3
Driver Storage.....8-4
Driver Warranty.....8-4

Tips

The effects of temperature, humidity, acidity, alkalinity, dust, vibration and other factors of the environment, as well as the aging and wear of the internal devices of the driver and many other reasons may lead to the existence of faults in the driver. Therefore, it is necessary to carry out daily inspection of the driver and the driver system in the process of storage and use, as well as regular maintenance and care.

⚠ Caution

★ Due to the dangerously high voltages present in the driver during operation, incorrect operation can result in serious personal injury. Dangerously high voltages remain inside the driver for a period of time after the power supply has been disconnected.

★ Only trained and authorized qualified professionals should perform maintenance on the driver.

★ Maintenance staff must remove all metal objects such as watches, rings, etc. before working. Clothing and tools that meet insulation requirements must be used during operation; failure to comply will result in electric shock.

⚠ Caution

When inspecting and maintaining the driver, do not touch the main circuit terminals inside the driver or other devices inside the driver, either directly or through metal tools, without fully confirming the following four items; otherwise, there is a risk of electric shock.

Reliably disconnect power to the driver and wait at least 5 minutes or more.

- Open the driver cover after all indicator LEDs on the operation panel are off;
- The charging indicator (CHARGE light) on the lower right inside the driver is off;

Measure the voltage between the main circuit terminals P(+) and N(-) with a voltmeter at 36VDC or less.

⚠ Caution

- Do not leave metal objects such as screws, wires, tools, etc. inside the driver, or there is a risk of damage to the driver.
- Never make unauthorized modifications to the inside of the driver, or the normal operation of the driver will be affected.
- The control board inside the driver has static sensitive IC components, so do not touch the IC components on the control board directly.
- Do not have the driver’ s motherboard serviced by non-manufacturer.

Routine Care and Maintenance

During normal use of the driver, it should do well in daily maintenance to ensure a good operating environment; record daily operating data, parameter setting data, parameter change records, etc., and establish and improve the files on the use of the equipment.

With routine maintenance and checks, various abnormalities can be detected in time to identify the causes in time, and to eliminate hidden faults as early as possible, so as to ensure the normal operation of the equipment and prolong the service life of the driver.

List of Routine Checks

Subject	Essentials and Criteria			Criteria
	Contents	Cycle	Means	
Running environment	(1) Temperature, humidity (2) Dust, vapor and drips (3) Gases	At any time	(1) Point thermometer, hygrometer (2) Observation (3) Observation and sniffing	(1) The ambient temperature is lower than 45°C , otherwise it will derate and run, with humidity conforming to the requirements for use. (2) No accumulation of dust, and no traces of water leakage or condensation. (3) No abnormal color or odor; the ambient temperature is lower than 45°C , otherwise it will derate and run; the humidity meets the environmental requirements.
Driver	(1) Vibration (2) Heat dissipation and generation (3) Noise	At any time	(1) Comprehensive observation (2) Comprehensive observation with a point thermometer (3) Listening by ear	(1) Smooth operation with no vibration. (2) The fan operates normally, with normal wind speed and air volume without abnormal heating. (3) No abnormal noise.
Motor	(1) Vibration (2) Heat generation (3) Noise	At any time	(1) Comprehensive observation and listening (2) Point thermometer (3) Listening by ear	(1) No abnormal vibrations or sounds. (2) No abnormal heating. (3) No abnormal noise.
Parameters of running state	(1) Input voltage of power supply (2) Output voltage of the driver (3) Output current of the driver (4) Internal temperature	At any time	(1) Voltmeter (2) Rectifier voltmeter (3) Ammeter (4) Point thermometer	(1) Compliance with specifications. (2) Compliance with specifications. (3) Compliance with specifications. (4) Temperature rise less than 40° C.

Regular Maintenance

The user may, according to the use of the environment, carry out a regular inspection of the driver every 3 to 6 months or less, so as to eliminate hidden faults and ensure long-term high-performance and stable operation.

Routine Checks

1.Whether the connector is loose or not;

2.Whether the main circuit terminals have poor contact, and whether there are traces of overheating in the copper connections;

3.Whether the power and control cables have any damage, especially whether the skin in contact with the metal surface has any traces of cuts;

4.Whether the insulating wrapping tape on the cable sleeves has fallen off;

5.Sweep the dust on the printed circuit boards and air ducts thoroughly, preferably by a vacuum cleaner;

6.Prior to insulation testing of the driver, all wires between the driver and the power supply and between the driver and the motor must be removed; and all input and output terminals of the main circuit must be reliably shorted with wires before testing to ground

.----------Precautions for Insulation----------

Use a certified 500V megohmmeter (or the equivalent of an insulation tester) and do not use a faulty meter.

■ It is strictly forbidden to connect only a single terminal of the main circuit to test the insulation to ground, otherwise there is a risk of damage to the driver.

■ Do not test the insulation of the control terminals as this will damage the driver.

■ Remember to remove all wires shorting the main circuit terminals after the test is completed

7. 7.If the motor is tested for insulation, the motor must be completely disconnected from the driver before testing the motor alone.

Consumables

The consumables of the driver are mainly cooling fan and electrolytic capacitor for filtering, whose service life is closely related to the environment of use and maintenance conditions. Under normal circumstances, the service life of the fan is 30,000-40,000 hours, and the service life of the electrolytic capacitor is 40,000-50,000 hours. Refer to the service life of the consumables, and then identify the normal years of replacement according to the operating hours of the driver. If abnormalities are found during inspection, the device should be replaced immediately. When replacing consumables, make sure that the models and electrical parameters of the components are identical or very close to each other.

Routine Checks of Common Consumables

1.Fans

Causes of damage: bearing wear and blade aging, etc.

Criteria: When the driver is de-energized, check whether there are any abnormalities such as cracks in the fan blades and other parts: When the driver is energized, check whether the fan operation is normal, and whether there are any abnormal vibrations and noises.

2.Electrolytic capacitor

Causes of damage: high ambient temperature, large pulsating power supply and electrolyte aging.

Criteria: whether the driver in the loaded operation has frequently overcurrent, overvoltage and other faults; whether there is liquid leakage or whether the safety valve is protruding; whether the measurement of static capacitance and insulating resistance is abnormal.

Driver Storage

1.Storage environment

Storage Environment Requirements for the Driver

Ambient characteristics	Requirements	Remarks
Ambient temperature	-40 ～ +70	Its long-term storage temperature should be lower than 30 ℃ , to avoid deterioration of capacitor characteristics, as well as being stored in the environment of condensation and freezing caused by temperature changes.
Ambient humidity	5 ～ 95%rh	Measures such as plastic film and desiccants can be used
Other conditions	Free from direct sunlight, with no dust, corrosive and flammable gases, oil mists, vapors, gases, drips, vibrations, and little salt.	

2.If the driver is not used for a long period of time, it is recommended to energize the driver every six months for more than half an hour each time during the storage period to prevent the failure of the internal electronic components, or to run the driver with no load.

Driver Warranty

1.The drivers are warranted under normal use for up to 12 months from the date of shipment; if beyond 12 months, a charge will be made for reasonable cost of repair;

2.A charge shall be made for repairs, even within 12 months, if the following occurs:

(1)Damage to the machine caused by wiring and operation not in accordance with the user manual;

(2)Damage due to fire, flood, abnormal voltage, etc;

(3)Damage caused when using the driver for non-normal functions;

Distributor:

CTB Co., Ltd.

Address: No. 9, 6th Yunxi Road, Miyun Economic Development Zone, Beijing (101500)

Tel: 010-69076533

Fax: 010-69076577

24 h national toll-free service number: 400-888-9055

File No.:CTB-PI-I-2609-06-01

The information on this product is subject to change without notice as improvements are made.